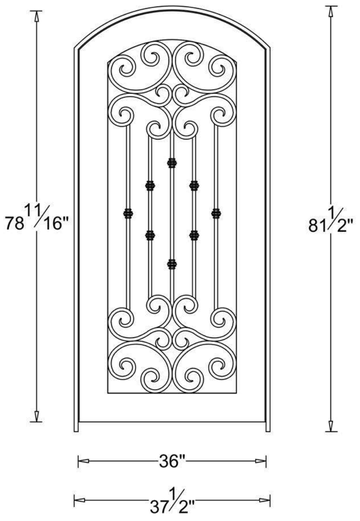

Cheyenne 3.0 x 6.8

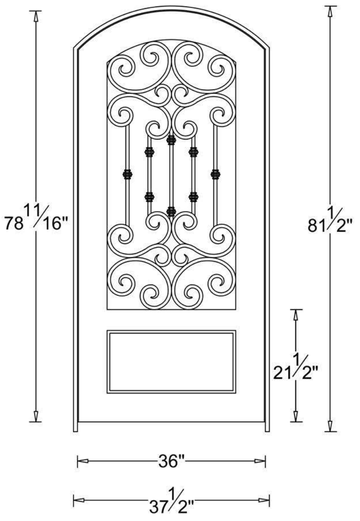

Cheyenne K 3.0 x 6.8

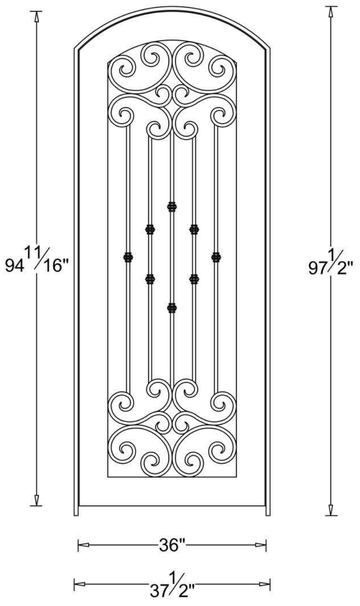

Cheyenne 3.0 x 8.0

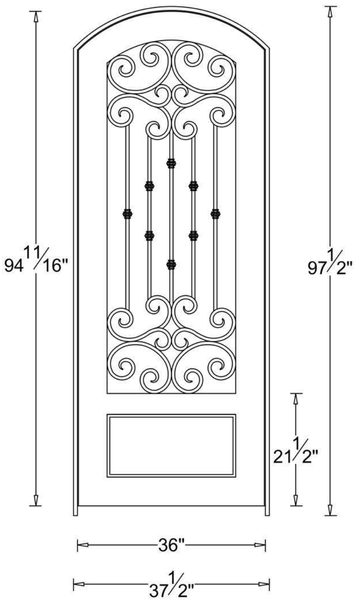

Cheyenne K 3.0 x 8.0

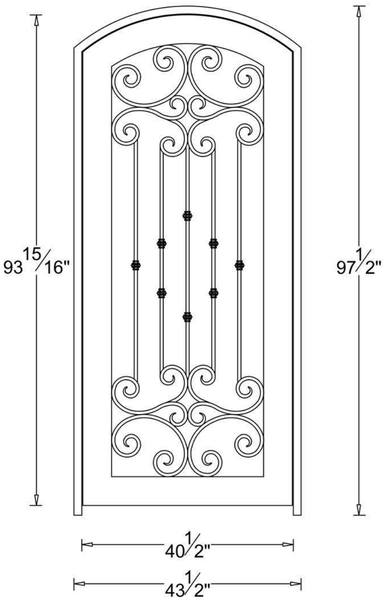

Cheyenne 3.6 x 8.0

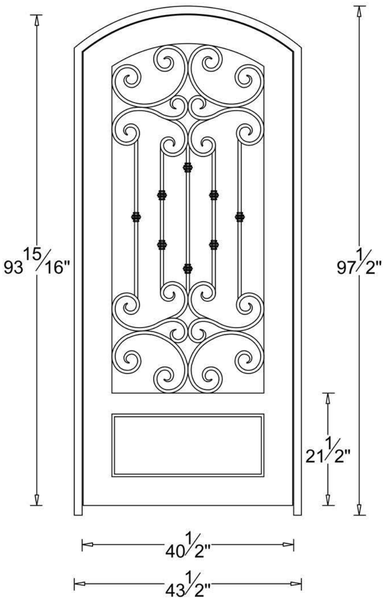

Cheyenne K 3.6 x 8.0