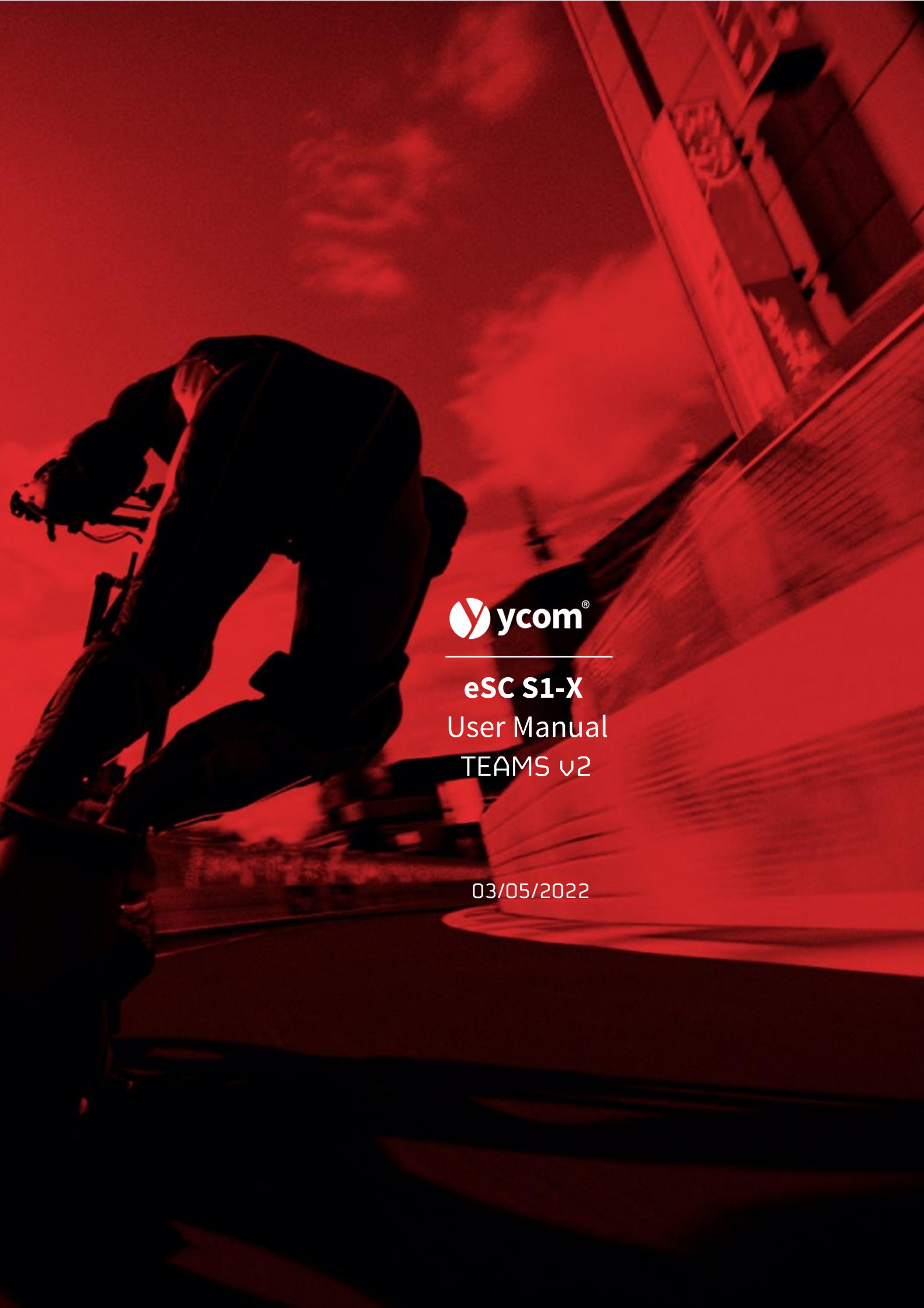

ycom®

eSC S1-X
User Manual
TEAMS v2

03/05/2022

AUTHOR: YCOM srl

OBJECT: eSC S1-X – User manual

Index

1.
eSC S1-X Vehicle Views
2.
eSC S1-X – Vehicle Specifications
2.1 – Dimensions
2.2 – Weight
3.
Supplied Parts: Partners
4.
General Agreement and Warranty
5.
Mileage of critical components
6.
Safety
7.
Set-Up
8.
Weight and Ballast
9.
Set-Up Adjustments
10.
Front Suspension Installation
11.
Rear Suspension Installation
12.
Steering Column Installation
13.
Brake System Information
14.
Motor maintenance
15.
Tightening Torque
16.
Battery
17.
How to Start the Scooter
18.
How to Storage the Scooter
19.
Checks during Wet or Rain conditions
20.
Battery Charger
21.
2D Logger & Dash
22.
eSkootr Functionality
23.
SCU
23.1 – SCU management
24.
Inverters
25.
Workbench
26.
Led Stripes
27.
Bag for transportation

For any technical info about the scooter or the manual:

- Pietro Barbieri (mechanical): pietro.barbieri@ycom.it
- Lorenzo Pazzoni (electric/electronic): lorenzo.pazzoni@ycom.it

For any info related to spares:

- Margherita Carrer, margherita.carrer@ycom.it

REV.	REV. DATE	REV. DESCRIPTION	ISSUED BY	CHECKED BY	APPROVED BY
02.0	27/04/2022	- Brake maintenance and levers regulation - Motors maintenance - New notes about SCU and inverters	P. Barbieri L. Pazzoni	D. Scalzotto	D. Scalzotto
01.0	04/04/2022	First Issue	L. Pazzoni	D. Scalzotto	D. Scalzotto

1.
eSC S1-X Vehicle Views

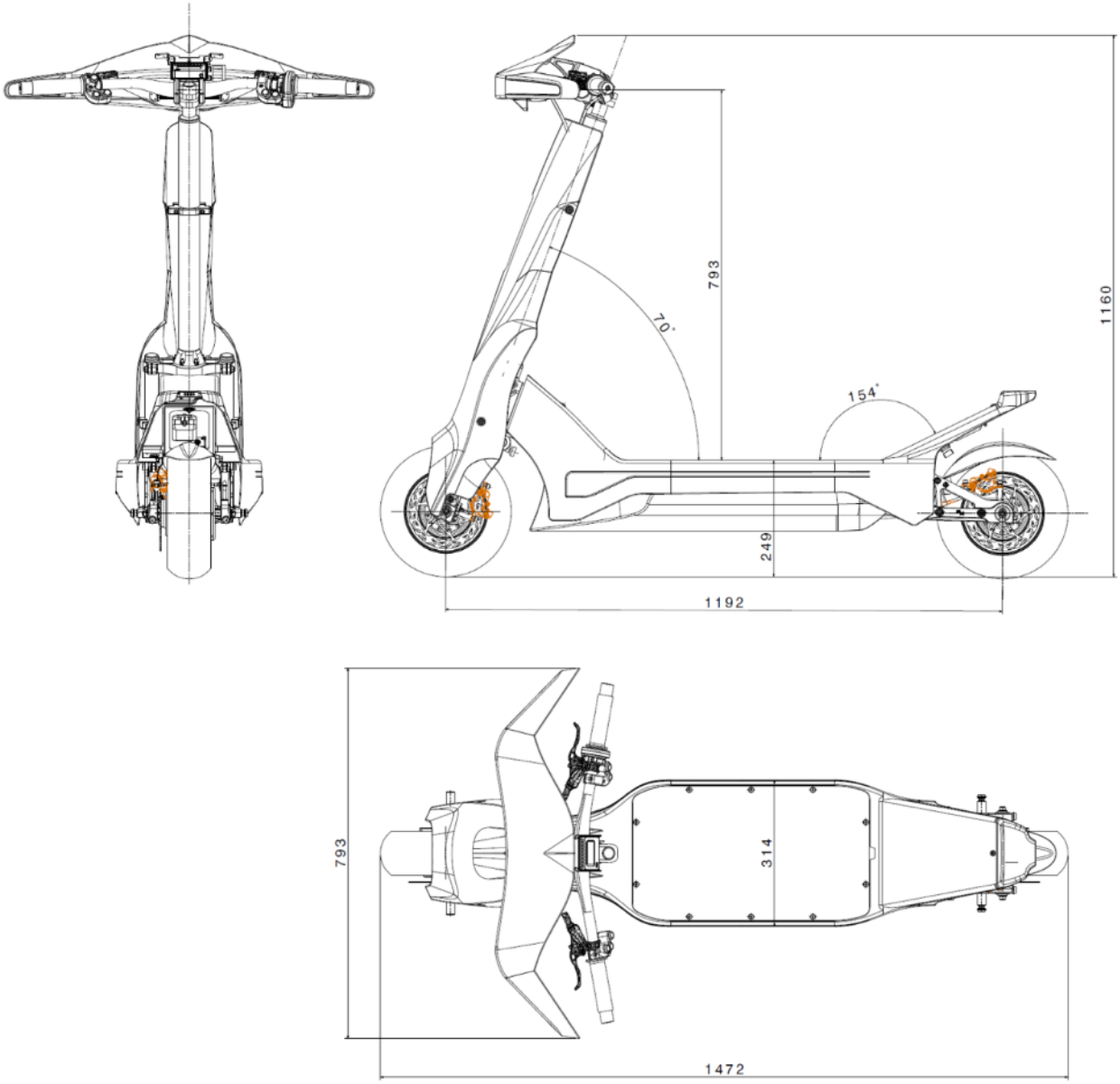

Image 1 *- Full Vehicle main views*

2.
eSC S1-X – Vehicle Specifications

Powertrain

- Motor: Rotex Twin Electric Hub Motor
- Single Motor Nominal Power: 7000 W
- Inverter ByStorm FTD50 with torque control
- Bespoke SCU with fully programmable front/rear maps.
- Boost strategy
- Adjustable front/rear motor maps during riding
- BOP logic implemented on the SCU

Battery Pack

- WAE Lithium-Ion battery pack with 15S6P configuration
- 21700 cell types
- 55.5V nominal voltage
- 24Ah nominal capacity (1320 Wh)
- Max. Discharge Peak Current 250A
- BMS integrated into the charging unit, max. charging current 25 Amps

Chassis

- Carbon fiber chassis
- Front Rigid Fork Assembly, Adjustable Ride Height
- Rear Rigid Fork Assembly, Adjustable Ride Height with 3 different positions
- Front Fork Assembly CNC machined from 7075 T6 Aluminum.
- Rear Fork Assembly CNC machined from 7075 T6 Aluminum.
- Carbon Fiber Steering Column

Braking System

- BRAKING INCAS 2.0 Hydraulic Brake system with separate lines for front and rear wheel
- BRAKING fix brake disc 160mm diameter front/rear
- BRAKING carbo-metallic brake pads set
- Brake line front/rear brake pressure sensors

Wheel and Tyres

- See Technical and/or Sporting Regulations for the most updated data. Option available when the manual has been written are:

Size	Description	PMT code	Color	Compound	Shore A
90/65 R6.5	90/65 JUNIOR ESC WHITE RAIN	M088J14-E01	WHITE	RAIN	45
90/65 R6.5	90/65 JUNIOR ESC YELLOW SUPER SOFT	M088J14-E02	YELLOW	SUPER SOFT	48

- Front/Rear Aluminum Bespoke Wheel Rim J 52mm

Bodywork

- 5 pieces Natural-fiber complete bodywork

Data Logging

- 2D Onboard data logging with 6Dof IMU

Performance

- Max. Speed 100km/h
- Max. Tilting Angle >45°

2.1 – Dimensions

Description	Units	Reference Dimensions
Length	mm	1472
Height (with 520mm steering column, handlebar @ design height)	mm	1160
Front Ride Height (design configuration)	mm	98
Rear Ride Height (design configuration)	mm	102
Wheelbase	mm	1192
Overall width	mm	793
Foot Platform width	mm	314
Steering column angle (from platform surface)	deg	20
Footrest angle (from platform surface)	deg	154

Table 1 *- Overall dimensions*

2.2 – Weight

The minimum allowed weight is specified by the sporting regulations of the eSC eSkootr Championship.

3.
Supplied Parts: Partners

Design eSkootr and manufacturing: Ycom Srl

Battery pack: Williams Advanced Engineering

Tyres: PMT

4.
General Agreement and Warranty

Motor racing is not covered by warranty due to the intentional choice of drivers to race in a dangerous environment.

The design of each vehicle is the subject of much research and development, technical analysis, and detailed testing. However, as with all motorsport products, it is vital that they are correctly maintained and adjusted for each individual circumstance. This manual is intended to ensure that you obtain the maximum performance and reliability from this chassis. We would stress that after each event or prolonged period of running the chassis should be carefully inspected and stripped as appropriate.
This manual contains lifting recommendations for critical components detailed in section Mileage of critical components. If in doubt, please contact our Commercial Department who will advise you or if necessary, put you in contact with one of our engineers.
It is important to ensure that all adjustments and tolerances are as specified. The use of parts not supplied by YCOM/ eSC will automatically invalidate any warranty or other liability which would normally be assumed by YCOM/eSC.

Your attention is drawn to the following statement:

Goods intended for motorsport or any related application, or for product development, evaluation or experimentation are supplied subject to the Customer recognizing that such goods may operate under extreme loads and conditions and that it is the Customer's responsibility to ensure that the goods are correctly inspected, adjusted and maintained at all times to suit the specific conditions in which they may be used.

Lightweight and weight optimized components are supplied subject to warranty only against manufacturing defects. It is possible that in certain conditions operating life may be reduced. Similarly, prototype, experimental or components manufactured to the Customer's design are supplied subject to warranty only against manufacturing defects.
Furthermore, such components, by their very nature, are not warranted as to their suitability for use or performance.

YCOM/eSC shall have no liability to the Customer for any loss or damage of any nature arising from any breach of any expressed or implied warranty, term or condition of the contract or from any negligence or breach of statutory or other duty on the part of YCOM/eSC in connection with the performance or purported performance of or failure to perform the contract other than as set out in this Condition. In no circumstances shall YCOM/eSC be liable for any claims for indirect or consequential injury or damage (including loss of profits) arising from any such matters.

5.
Mileage of critical components

In any case, all scooter components must be checked after every crash!

	INSPECTION MILEAGE [km]	LIMIT MILEAGE [Km]
CHASSIS		
Monocoque	Every 150km	-
Footboard Plate	Every 150km	-
Footrest	Every 150km	-
Front Suspension Studs	Every 150km	-
Rear Suspension Studs	Every 150km	-
FRONT SUSPENSION		
Steering bearing support	Every 150km	-
Steering bearing	Every 150km	-
Steering bearing shaft	Every 150km	-
Fork upper plate	Every 150km	-
Fork upper plate studs	Every 150km	-
Fork lower plate	Every 150km	-
Fork tube	Every 150km	-
Steering damper	Every 75km	-
Front brake caliper bracket	Every 150km	-
REAR SUSPENSION		
Fork plate LH	Every 150km	-
Fork plate RH	Every 150km	-
Chassis bracket LH	Every 150km	-
Chassis bracket RH	Every 150km	-
Transversal reinforcement	Every 150km	-
STEERING SYSTEM		
Steering column	At the end of every race weekend	-
Handlebar	At the end of every race weekend	-
Stem	At the end of every race weekend	-
BRAKE SYSTEM		
Front caliper	At the end of every run	-
Rear Caliper	At the end of every run	-
Caliper and bleeding screw O-rings	At the end of every race weekend	End of the season
Brake caliper pistons	At the end of every race weekend	-
Pistons seals and caliper O-ring	At the end of every race weekend	-
Brake pump lever LH	Every 150km	-
Brake pump lever RH	Every 150km	-
Front Brake line	Every 150km	-
Rear brake line	Every 150km	-
Brake oil	Every 150km	End of the season
ELECTRICAL SYSTEM		
Front Motor	At the end of every run	-
Front Inverter	At the end of every race weekend	-
Rear Motor	At the end of every run	-
Rear Inverter	At the end of every race weekend	-
Complete Loom	Every 150km	-

6. Safety

- It’s forbidden to open or tune electric or electronic parts (battery, inverters, SCU, DC/DC etc.). This would compromise the operation of the scooter.
- Before starting any installation or work, when the battery is connected to the eSkootr, remember that there is voltage in the cables, so be careful of wrenches or tools that could generate short circuits.
- If parts of the body as finger or hair get caught in the spinning parts of the scooter, this may lead severe injuries. Please be careful.
- If the product is lifted by holding the handlebar, there is a possibility that the scooter may be damaged. When lifting, be sure to hold the scoter by the front fork or front pins and rear pins or footrest.
- Before starting any run remember to wear the wrist bracelet of the Wrist kill Switch.
- Be careful when handling dry ice. Use appropriate protective gloves and goggles. Don't breathe it.

7. Set-Up

The vehicle is supplied with a suggested setup. The vehicle in terms of adjustment is basic due mainly to the choice of having rigid front and rear suspensions.
Anyway, it should be possible to play with some basic vehicle dimensions to change the vehicle behavior and performance.
For example, as explained better in the next section it should be possible to adjust independently the front and rear ride height.
Another parts fully adjustable is the steering damper, where is possible to set different level of damping.
Regarding the riding position, it is possible to possible moving the handlebar stem along the steering column axis.

Standard Mechanical Setup (dry conditions)

- Front Tyre: see Technical and/or Sporting Regulations
- Cold pressure: see Technical and/or Sporting Regulations
- Front Tyre: see Technical and/or Sporting Regulations
- Cold pressure: see Technical and/or Sporting Regulations
- Standard Front Fork height: Upper fork plane in correspondence of the lowest Position Mark
- Standard Rear Fork height: Center-distance on the ride height 3-hole adjuster in the SHORTER position
- Standard Steering Damper Settings: 15 click anticlockwise from full closed position
- Standard Steering Damper Spacer: N°2 spacer (5mm each) on both side

Other adjustable features on the eSkootr eSC S1-X, as better explained on the specific section of the vehicle manual, concern the SCU controls. It is possible for the rider to select independently up to 5 different maps for the front motor and the rear motor. With these maps basically it is possible to control the level of power for each motor and manage the “shape” of the output curve of the motor.

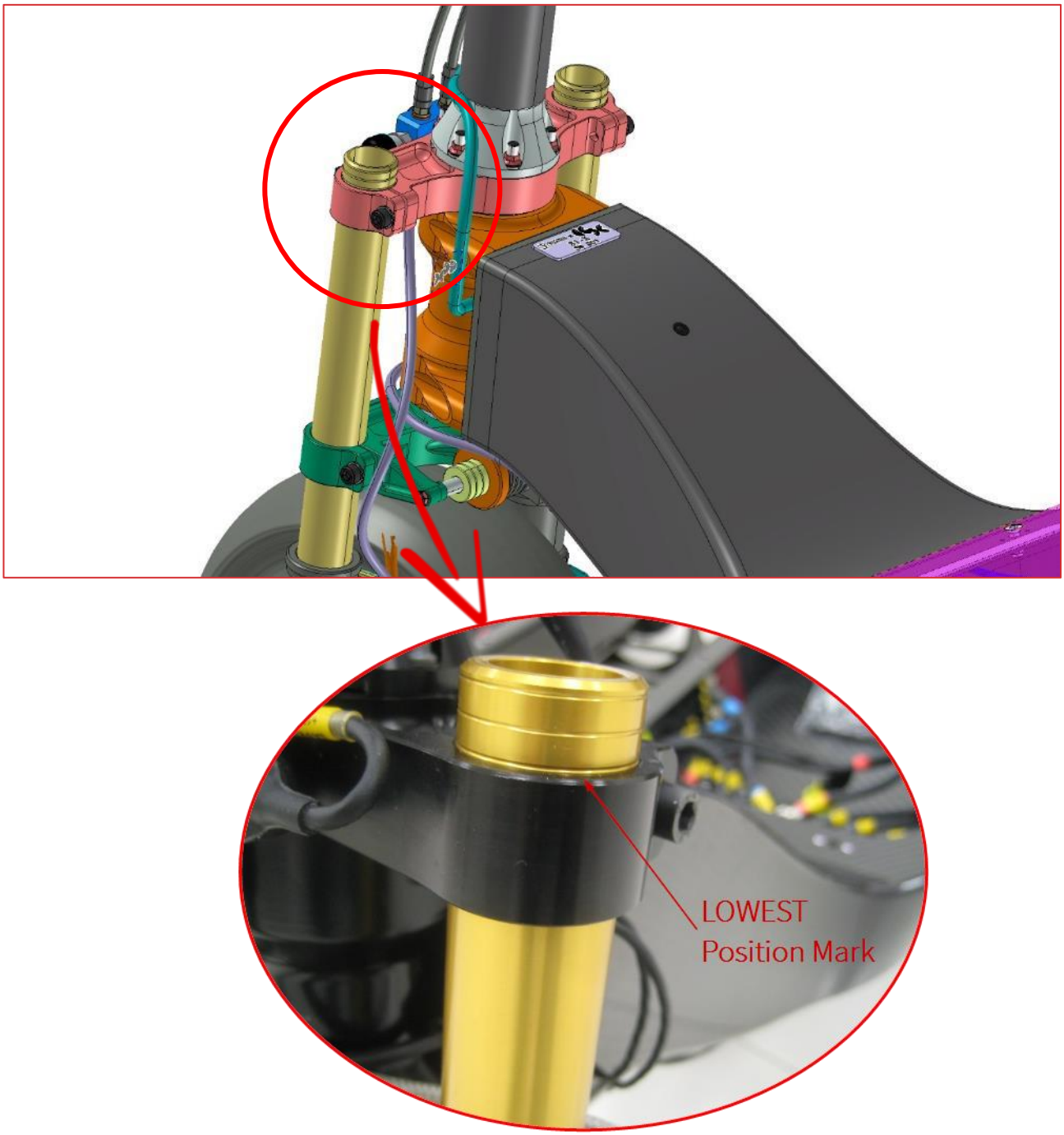

Image 2 *- Standard Setup for Front Fork assembly*

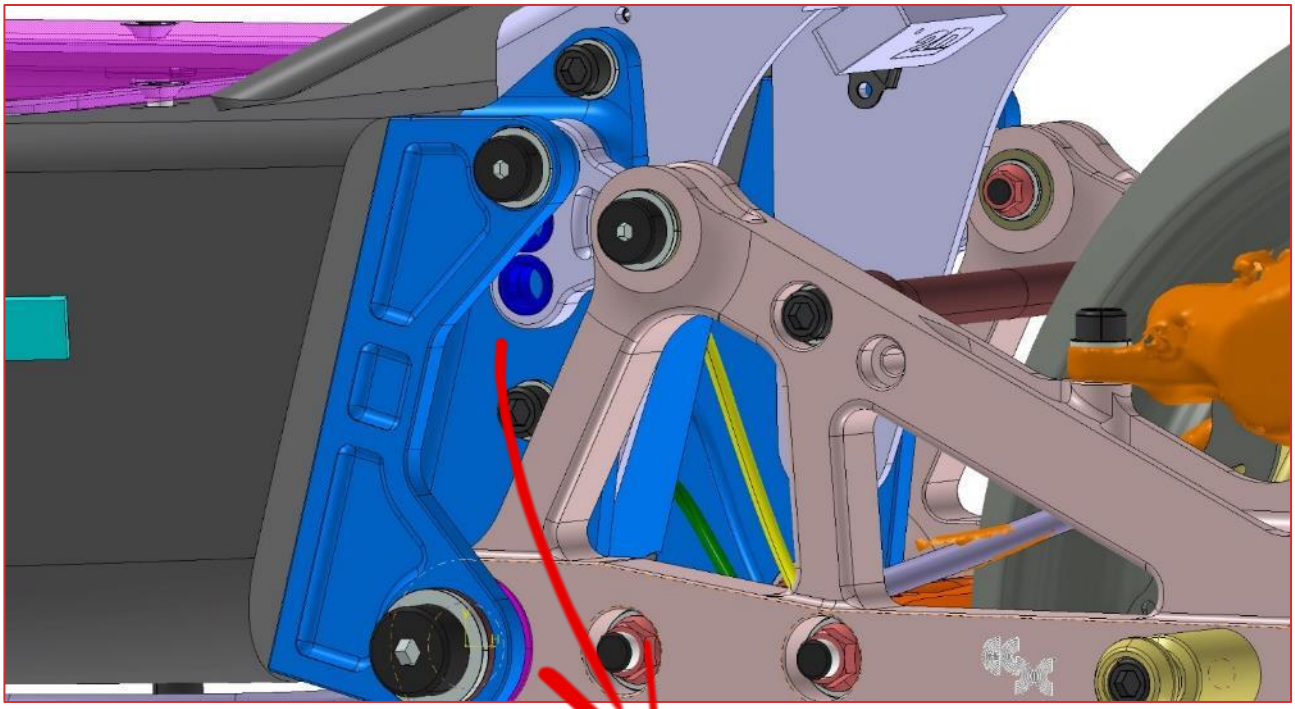

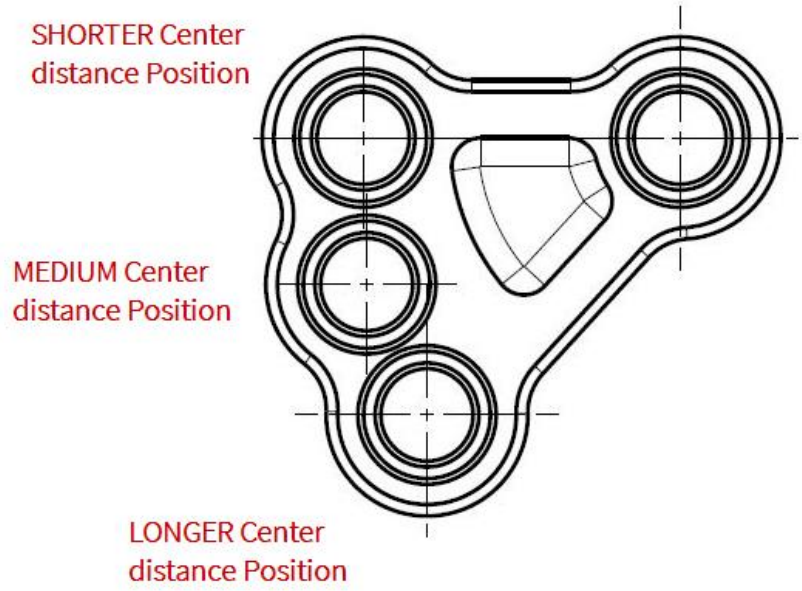

Image 3 *- Standard Setup for Rear Fork assembly*

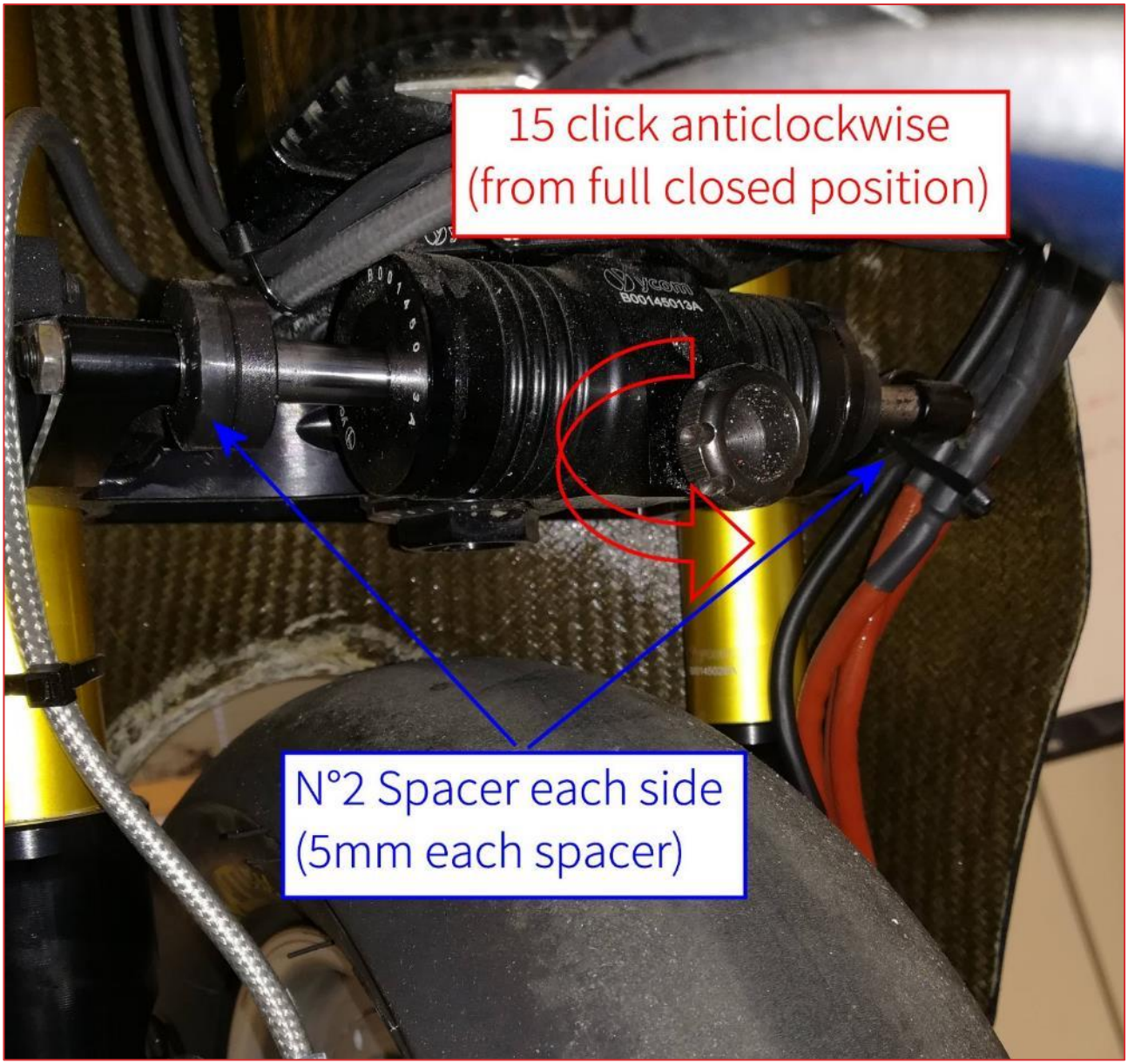

Image 4 *-Standard Steering Damper Setup*

8.
Weight and Ballast

The weight of the vehicle in running condition is 41.5kg.
In case the BOP (Balance of Performance) request is to add weight on the vehicle, there is the possibility to add some ballast under the chassis on the keel area.
The ballast must be fixed with 4 M6 bolts and its maximum allowed size is 100x405x11 mm.

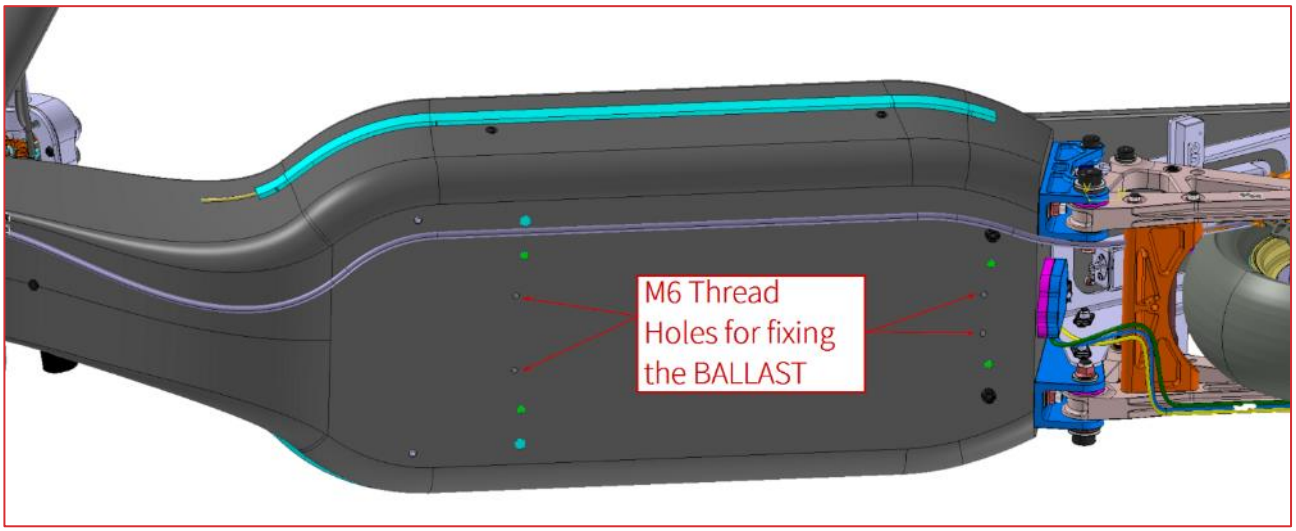

Image 5 *- Space under the chassis for ballast fixing*

9. Set-Up Adjustments

Front Fork

POSITION MARK	RIDE HEIGHT CHANGE FROM STANDARD [mm]
LOWEST POSITION (Standard Configuration)	0
INTERMEDIATE POSITION (+5mm)	+4.70
HIGHEST POSITION (+10mm)	+9.40

Rear Fork

POSITION HOLE	RIDE HEIGHT CHANGE FROM STANDARD [mm]
SHORTER Center Distance Position (Standard Configuration)	0
MEDIUM Center distance Position (+2.5mm)	+5.60
LONGER Center distance Position (+5.0mm)	+5.80

Steering Angle

STEERING DAMPER SPACER	STEERING ANGLE [deg]
NO SPACER	+/-27.5°
5mm spacer each side	+/-25°
STANDARD (10mm spacer each side)	+/-20°
15mm spacer each side	+/-15°

***Table 2** - Set-Up Adjustments*

10.
Front Suspension Installation

Experienced mechanics are required to work on the front suspension assembly as incorrect assembly could compromise the safety of the vehicle.

Bearing Preload

The main thing that needs to be checked every time is the correct preload of the steering bearing.
As for the motorbike, inside the steering support there are N°2 Single Tapered roller bearing. These kind of bearing needs a certain preload to remove any kind of play.
The front fork must be free to turn smoothly with a minimum of preload. The amount of preload should be the minimum to avoid any kind of bearing play and keeping the rotation of the steering as free as possible.

To adjust the preload, it is necessary to use the special wrench tool B00101082A.

The sequence to adjust the preload when the scooter is on running conditions are the following:

1) Remove the steering damper. To do this, unscrew the N°2 set screw at the extremity of the steering damper shaft till is completely free and remove the steering damper pulling it off from its fixing pin.
2) Unscrew the M8 bolt on the lower fork plate
3) Unscrew with the special wrench tool B00101082A the lower locking bolt (below the lower fork plate)
4) Unscrew the N°2 M6 bolt locking the lower plate to the two forks
5) By using a rubber hammer, slide down the lower fork plate along the fork. In this way the locking nut for the preload setup is completely accessible for adjusting the preload.
6) Unscrew the N°3 plastic set screw from the locking nut and by using the special wrench tool adjust the preload.
7) After adjusting the preload, screw the N°3 set screw again
8) Position again the lower fork against the locking nut and screw the M8 bolt to lock it
9) Screw and lock with the special wrench tool the lower locking bolt (below the lower fork plate)
10) Lock the N°2 M6 bolt to fix the lower plate to the two forks. (Refer to the tightening torque section for having information about the proper torque)
11) Fit again the steering damper in place and lock it with the N°2 setscrew as explained on point 1.

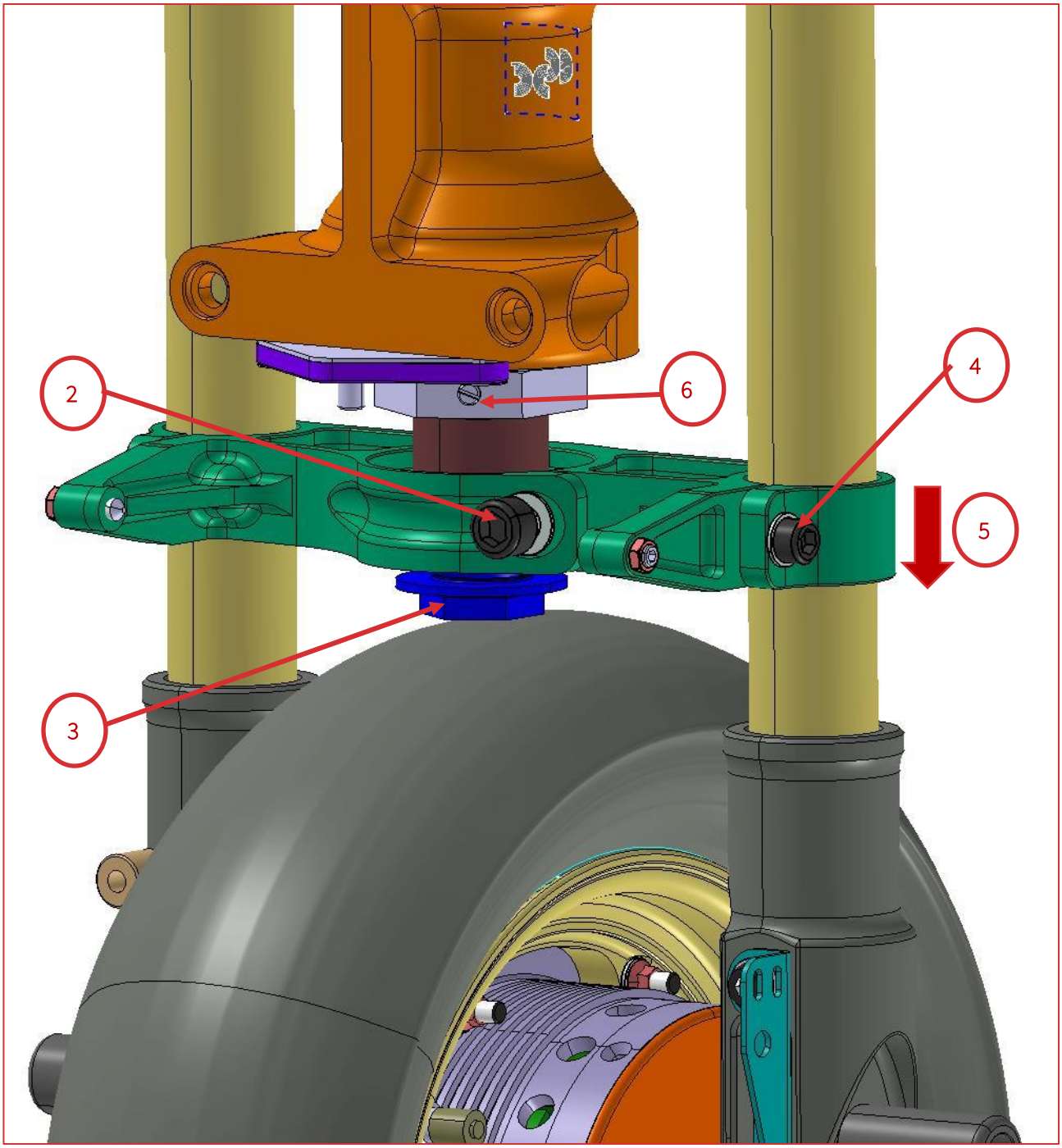

Image 6 *- Sequence for adjust the steering bearing preload*

Front Wheel Assembly Removal/Installation

The removal of the front wheel Assembly is necessary on the following situation:

- Brake disc Change
- Tire Change
- Motor Change – each motor is paired with some specific parameters on the related inverter: if you replace a motor, eSC or YCOM must update the inverter software to not affect scooter performances

To remove the front wheel assembly to proceed with all the maintenances as illustrated above, it is necessary to follow this sequence:

1) Switch OFF the main switch of the vehicle (P0)
2) Remove the front brake caliper
3) Unscrew the N°2 M10 Knut on the motor axis
4) Unscrew and remove the N°2 Unbrako M6 bolt
5) Remove the complete front wheel assembly (with the hub motor)

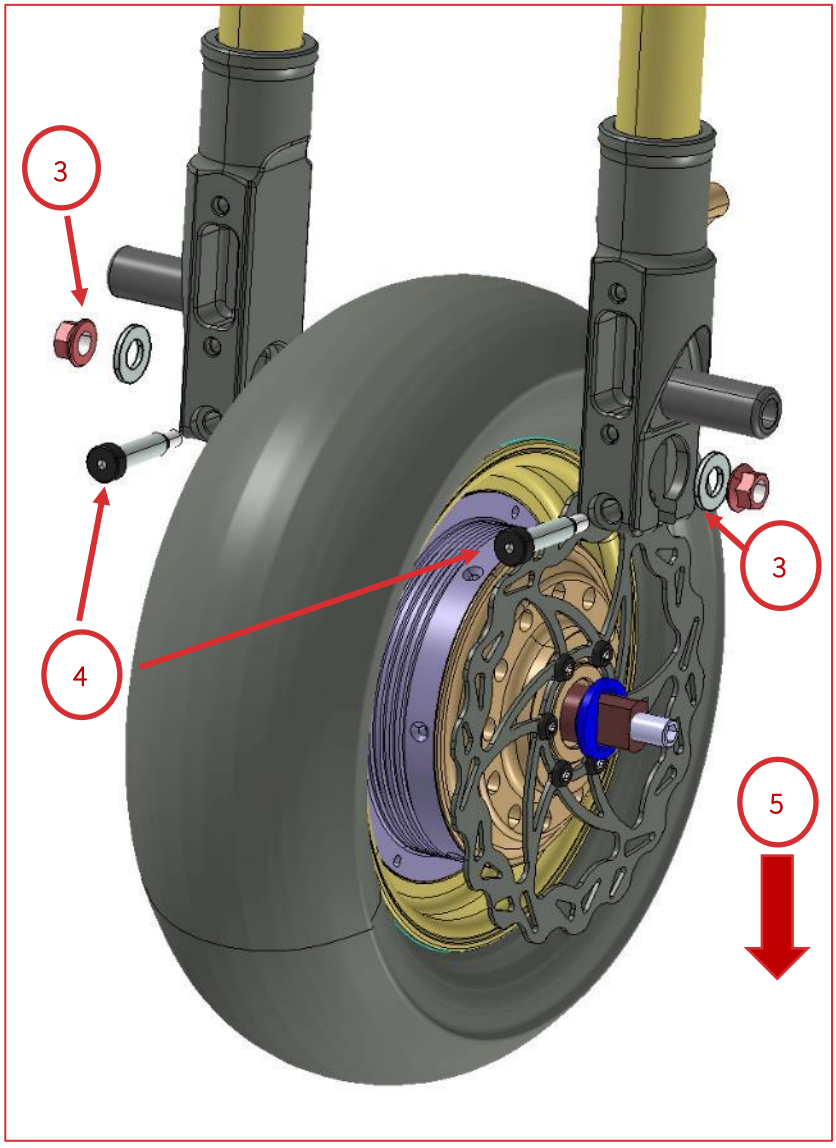

***Image 7** - Sequence for disassemble/assemble the front wheel assembly*

6) Remove the MGU wiring insulator cover positioned on the front closing plate of the chassis
7) Disconnect the N°3 Motor Phase cable. To disconnect the Motor Phase cable, use a N°10 Wrench tool and remove the brass nut, the brass washer, and the phase cable connector.
8) Disconnect the Motor Signal cable from the front closing plate of the chassis

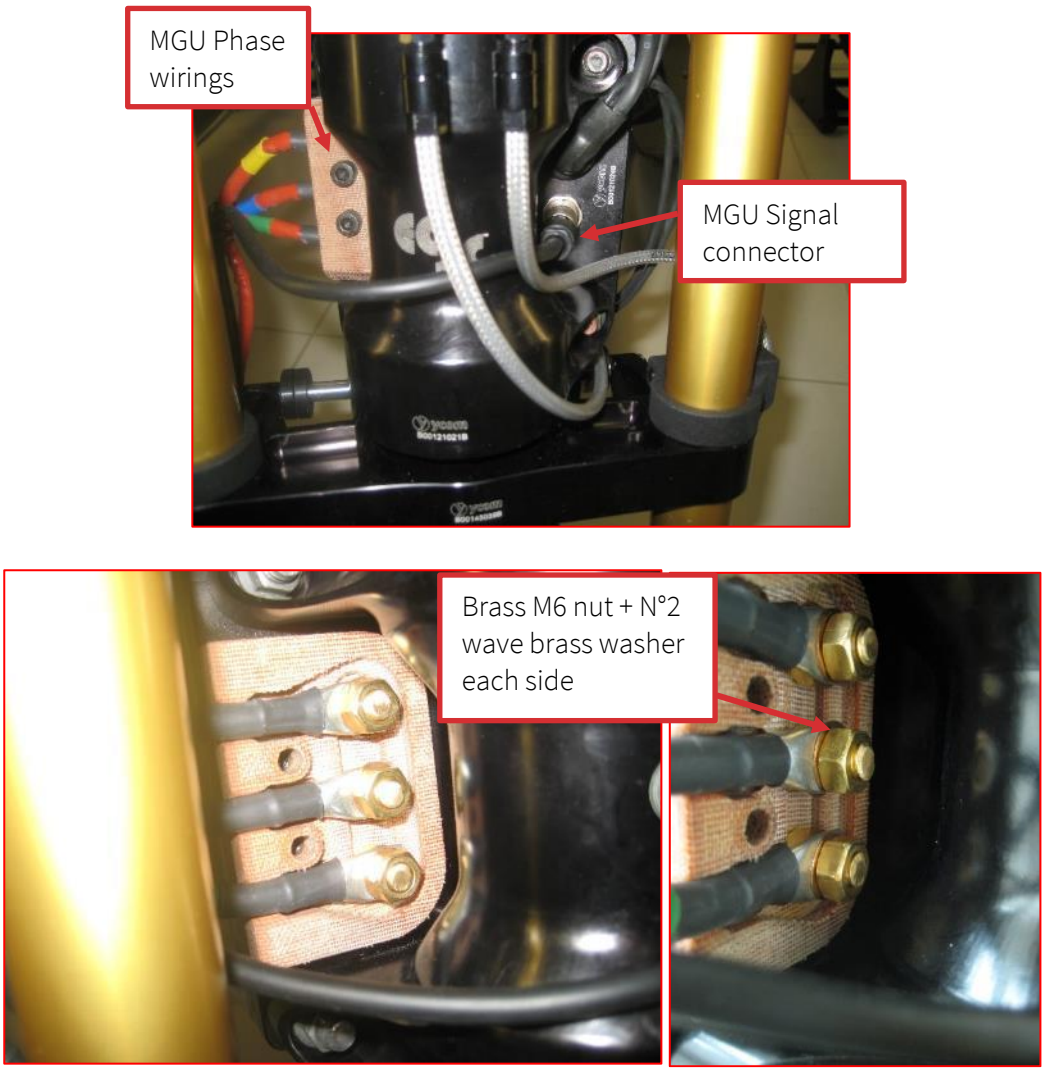

***Image 8** - MGU Phase cable & signal connector*

9) Now it is possible to remove completely the front motor assembly from the vehicle and proceed with one of the maintenances (Brake disc change, Tyre change, Motor change)
10) Re-assembly everything following the above instruction in the opposite way. When positioning the Motor into the forks, be careful about the correct positioning of the N°2 centering bushes on the Motor Axis. To facilitate insertion of the motor inside the fork sheath housing, you can help yourself with the help of a rubber hummer.

NB:

- Pay attention on the motor phase order. Remember to install no.2 copper washer between all the nuts and connectors.
- When disassemble the MGU please be careful during this operation due to voltage hazard.
- When disassemble the MGU check the tightness of the copper studs.
- At the end of the day also check the tightness of the copper studs/nuts inside the chassis

11.
Rear Suspension Installation

Experienced mechanics are required to work on the rear suspension assembly as incorrect assembly could compromise the safety of the vehicle.

Rear Wheel Assembly Removal/Installation

The removal of the rear wheel Assembly is necessary on the following situation:

- Brake disc Change
- Tyre Change
- Motor Change – each motor is paired with some specific parameters on the related inverter: if you replace a motor, eSC or YCOM must update the inverter software to not affect scooter performances

To remove the rear wheel assembly to proceed with all the maintenances as illustrated above, it is necessary to follow this sequence:

1) Switch OFF the main switch of the vehicle (P0)
2) Remove the rear brake caliper
3) Unscrew the N°2 M10 Knut on the motor axis
4) Unscrew and remove the N°2 Unbrako M6 bolt
5) Remove the complete rear wheel assembly (with the hub motor)

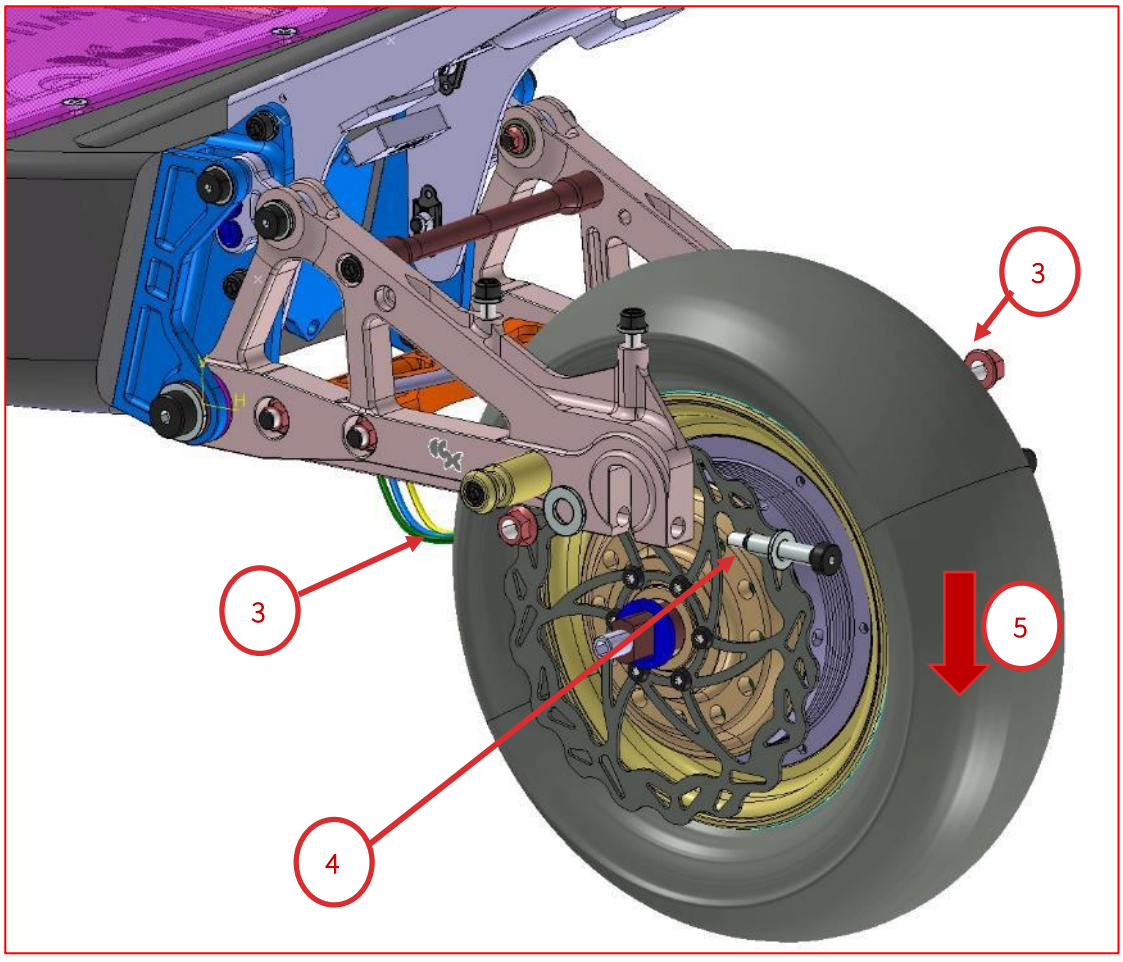

Image 9 *- Sequence for disassemble/assemble the rear wheel assembly*

6) Remove the MGU wiring insulator cover positioned on the rear closing plate of the chassis
7) Disconnect the N°3 Motor Phase cable. To disconnect the Motor Phase cable, use a N°10 Wrench tool and remove the brass nut, the brass washer, and the phase cable connector.
8) Disconnect the Motor Signal cable from the rear closing plate of the chassis

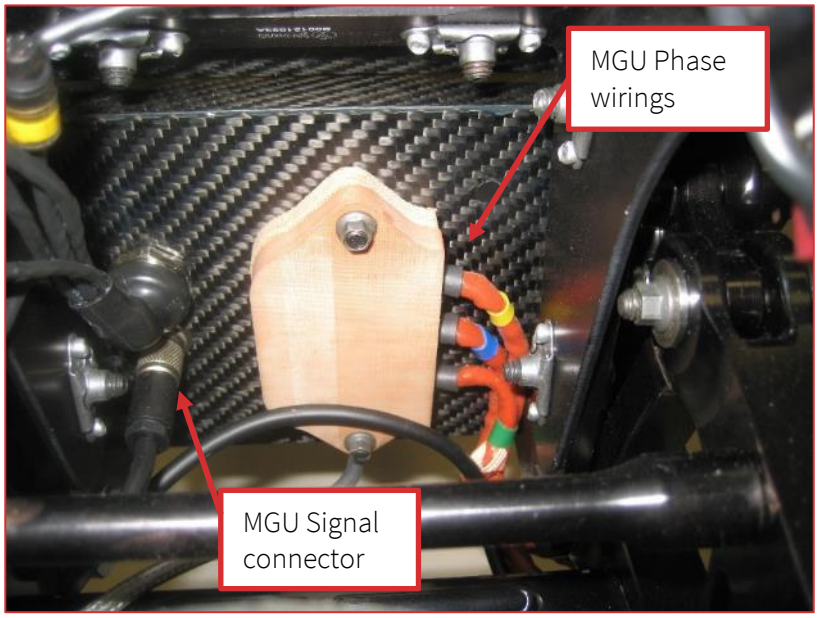

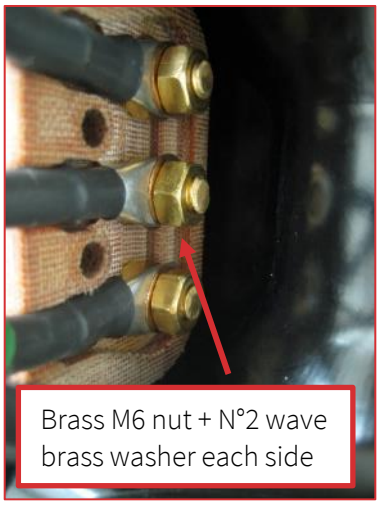

***Image 10** - MGU Phase cable & signal connector*

9) Now it is possible to remove completely the rear motor assembly from the vehicle and proceed with one of the maintenances (Brake disc change, Tyre change, Motor change)
10) Re-assembly everything following the above instruction in the opposite way. When positioning the Motor into the rear forks, be careful about the correct positioning of the N°2 centering bushes on the Motor Axis. To facilitate insertion of the motor inside the housing, you can help yourself with the help of a rubber hummer.

NB:

- Pay attention on the motor phase order. Remember to install no. 2 copper washer between all the nuts and connectors.
- When disassemble the MGU please be careful during this operation due to voltage hazard.
- When disassemble the MGU check the tightness of the copper studs.
- At the end of the day also check the tightness of the copper studs/nuts inside the chassis

12.
Steering Column Installation

The steering tube is fixed to the upper fork through N°6 M6 stud. To avoid any kind of mechanical play between the steering column and the fork and increase the stiffness of the system, there is a mechanical centering between the steering column tube and the bearing shaft.
To disassembly the complete steering column (operation necessary for scooter transportation) it is necessary to unscrew the N°6 knut from the stud. Then insert a flathead screwdriver into one of the N°2 recess on the lower steering column insert and leverage till the steering column are completely removed from the studs.
When the steering column is out of the studs it should be possible to rotate it a bit and remove it completely and easily from the bearing shaft.

Image 11 *- Steering column detail*

13.
Brake System Information

NB:

- Use only BRAKING brake fluid dot 4 (spare code MEC0057)

The braking system is from BRAKING, INCAS 2.0 model. The brake discs installed are fixed with 160 mm of diameter.

The brake levers allow independent regulation of both position and lever play. To adjust the lever position first loosen the grub screw on the bottom of the pump body, then use the second screw to regulate the position. Tight again the grub screw underneath to lock the position.

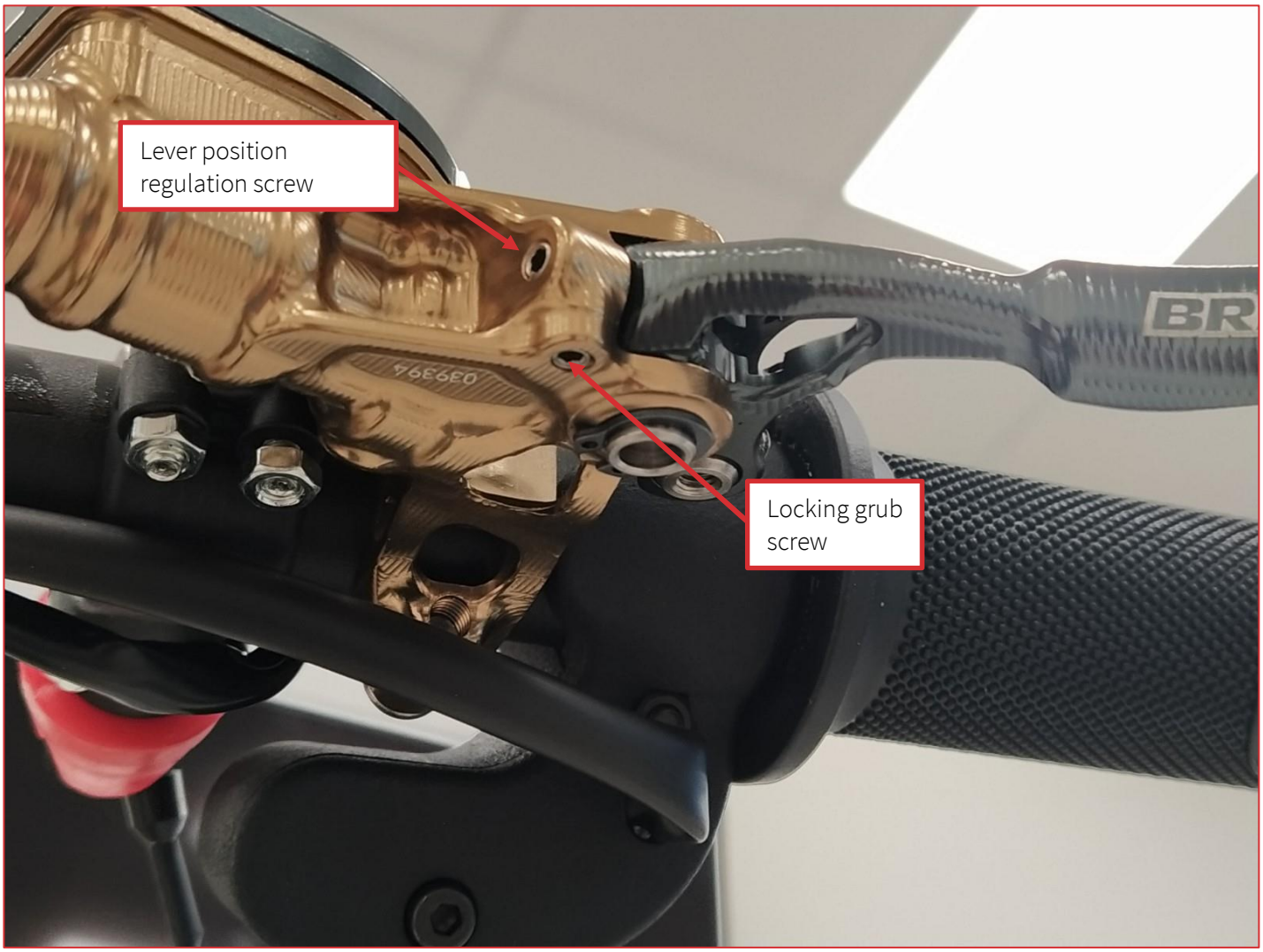

***Image 122** – Brake lever position regulation*

The lever play must always be around 1-2 mm, if it is not in this range adjust accordingly.
To regulate the lever play use the two screws on the lever. First loosen the grub screw on the top part of the lever, then adjust the play using the screw on the side of the lever. Tight again the grub screw on the top part of the lever.

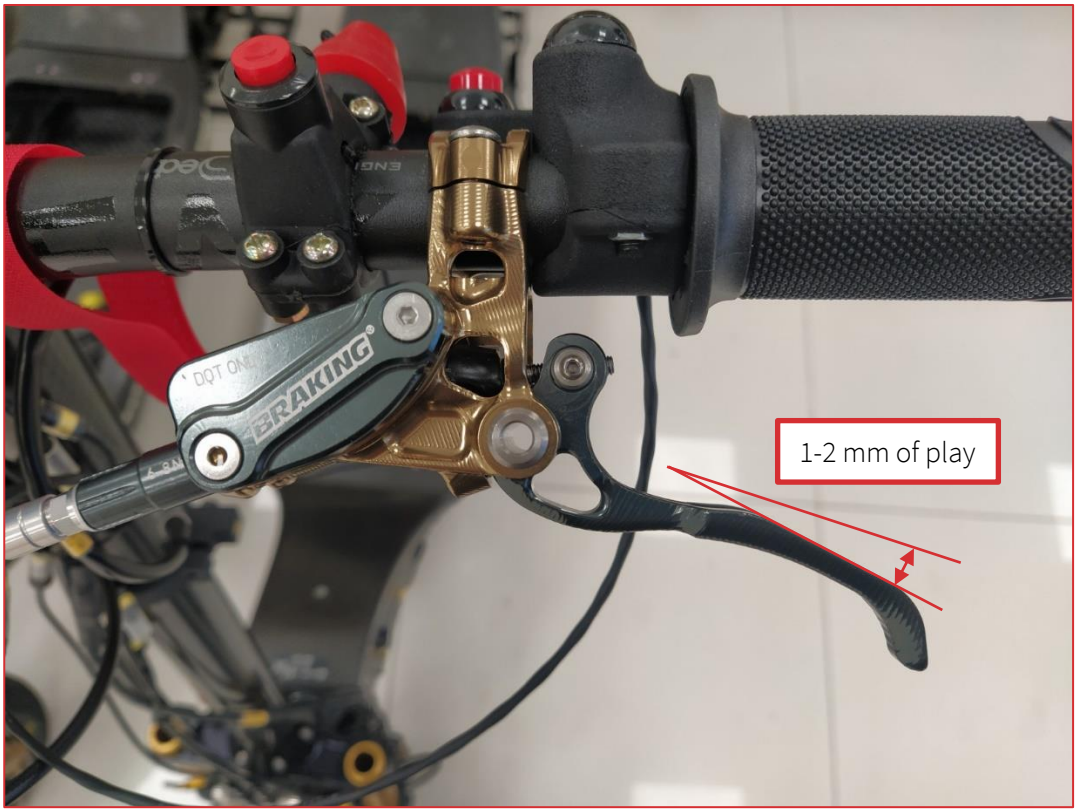

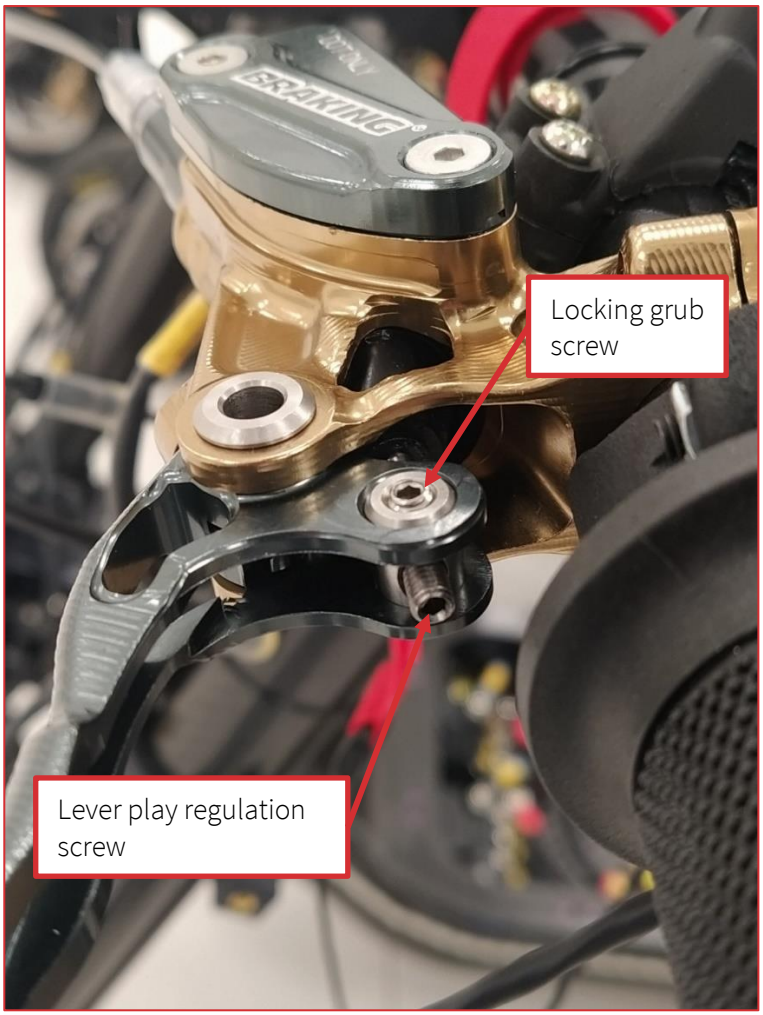

Image 133 *– Brake lever play regulation*

NB:

- Ensure the correct play is always present on the brake lever. If there is no play there is the risk of locking the pistons, causing a possible complete lock of the wheel.

Brake calipers and discs are both fixed so every time the caliper is being mounted to the scooter attention must be paid to the alignment between caliper, and disc.
To allow the alignment the calipers have slotted holes. To correctly align the calipers install the caliper on the scooter but keep the two fixing screws loose then spin the wheel and use the brake lever to stop it spinning. Keeping pressure in the system start to tighten the two screws alternately and step by step. The wheel should be turning smoothly with no resistance given by the pads forcing on the disc. Also the disc should be centered to the caliper (to the pistons).

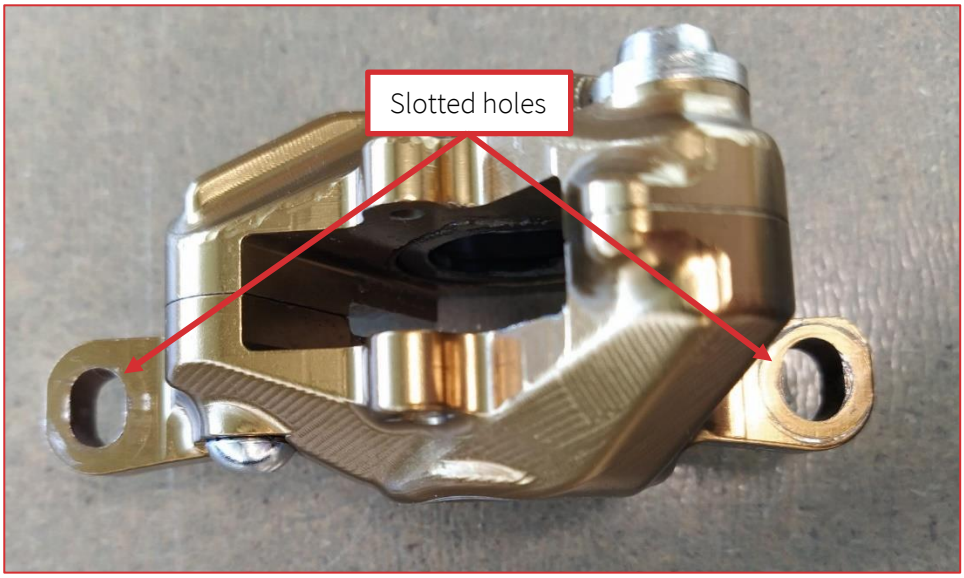

Image 143 – Brake caliper

To reduce issues and wear on the components keep the brakes clean at all times.
If adjusting lever position and play is not sufficient to guarantee the correct behaviour of the brake bleed the system.
To correctly bleed the system remove the caliper (especially at the rear it is necessary to remove the caliper to have a correct bleeding, if the caliper remains higher than the brake hose it is very difficult to remove all the air from the brake line) and the bleeding screw, and place a hard material between the pads (or the pistons).
Attach a syringe filled with oil to the caliper and with the aid of a second syringe start the bleeding process.

Image 154 – Brake bleeding

NB:

- At the end/start of each day remove both calipers from the scooter and clean all the brake components.
- At the end/start of each event take the calipers apart and inspect O-rings, pistons and pistons' seals. If needed replace the components, otherwise clean everything and reassemble the calipers using Vaseline to lube all the components.

Image 165 – Caliper revision

14.
Motor maintenance

The most important thing is to keep the engine as clean as possible. The outer surface can be carefully cleaned with a damp cloth, the inside blown out with compressed air.

NB:

- At the end of every run clean the 2 motors as described above
- For wet conditions see dedicated paragraph.

At the end of every race weekend check:

- bearing clearance
- bearing seal condition
- grease leakage
- noise

If there is something not OK even if in only one of the above points, the motor must be replaced. Contact YCOM that can evaluate if a repair is possible.

15. Tightening Torque

Thread [mm]	Pitch [mm]	Torque [Nm]		
		8.8	10.9	12.9
3	0.5	1.1	1.5	1.8
4	0.7	2.5	3.5	4.5
5	0.8	4.9	6.9	8.3
6	1.0	8.5	12.0	14.0
8	1.0	22.0	31.0	37.0
8	1.25	20.0	29.0	34.0
10	1.25	42.0	59.0	71.0
10	1.5	40.0	57.0	68.0
12	1.5	72.0	101.0	121.0
12	1.75	69.0	97.0	116.0
14	1.5	118.0	166.0	199.0
14	2.0	110.0	154.0	185.0
16	1.5	180.0	253.0	303.0
16	2.0	128.0	240.0	287.0

Table 3 *- Tightening Torque*

NB: All the tightening torque maximum values are just recommended values and these values are depending by the surface conditions of the bolts, nuts and parts to be bolted.
Every time please check the torque value and if necessary, adjust the torque.

16. Battery

For information about the battery, maintenance and safety please refers to the WAE Battery Manual.
The battery has 4 fixing point, two in the front side and two in the rear side. To fix the battery use two M6X20 hexagon socket screws for the front (mounted from the top) and two M6X25 hexagon socket screws for the rear (mounted from the bottom).
The battery has one negative pole plate, two positive pole plates and one signal connector.

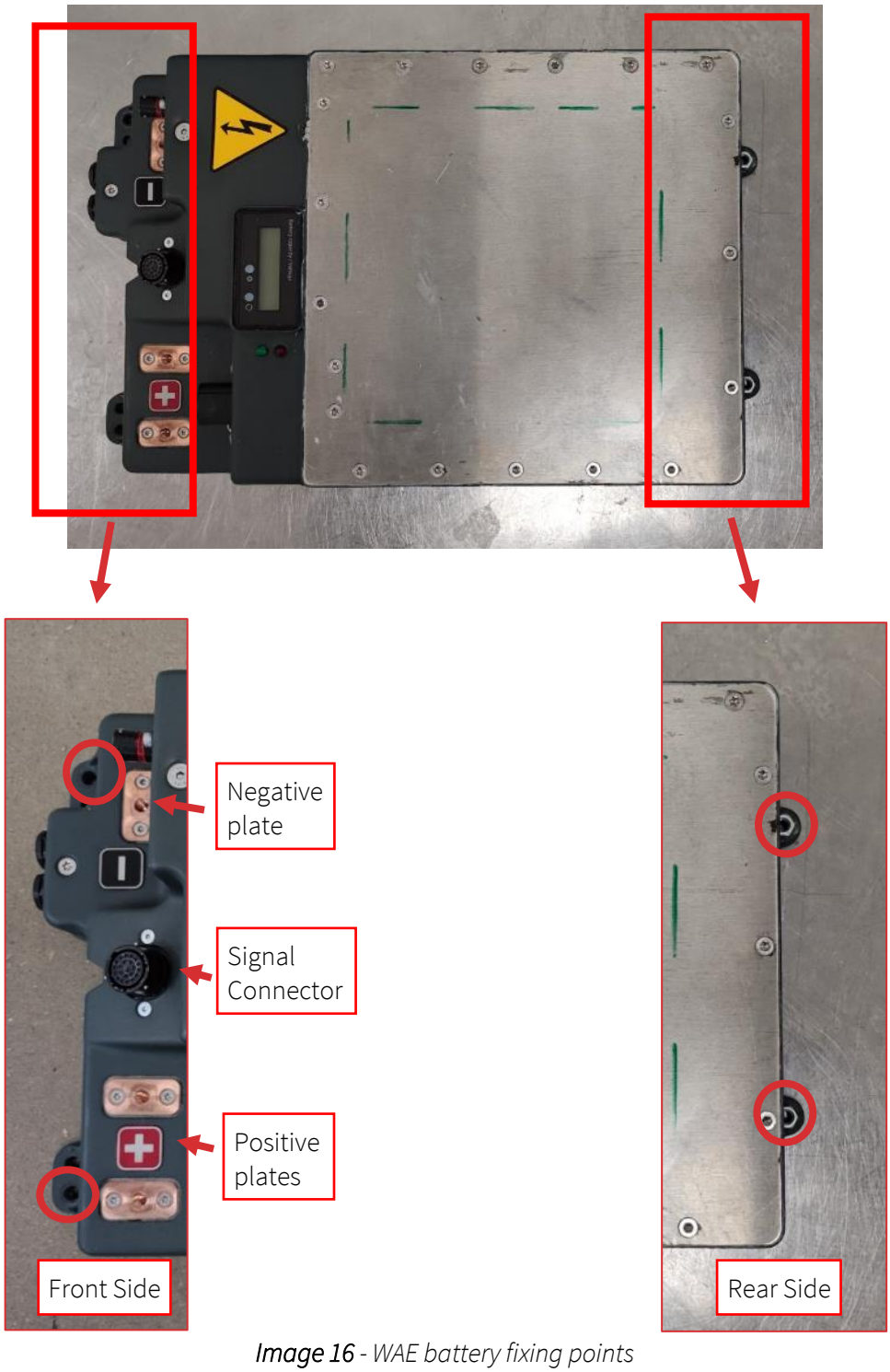

Image 16 - WAE battery fixing points

17.
How to Start the Scooter

PRE-RUN CHECKS

Based on the experience gained during the many track tests done, the preliminary checks to be done before a run are indicated below:

- Check if the brake hydraulic system has leaks or air bubbles that cause longer lever movement without brake pressure
- Check that the brake discs are not bent due to the excessive heat generated during hard braking or after a crash
- Check the condition of the brake pads
- Check the tire pressure. See Technical Regulations for cold and hot values.
- Check that the battery voltage is higher than 52V
- Check that the battery temperature is below 40 °C (Maximum allowed temperature = 65 °C)
- Check that the motor temperature is below 45 °C (Maximum allowed temperature = 135 °C)

Check that the inverter temperature is below 35 °C (Maximum allowed temperature = 90 °C)

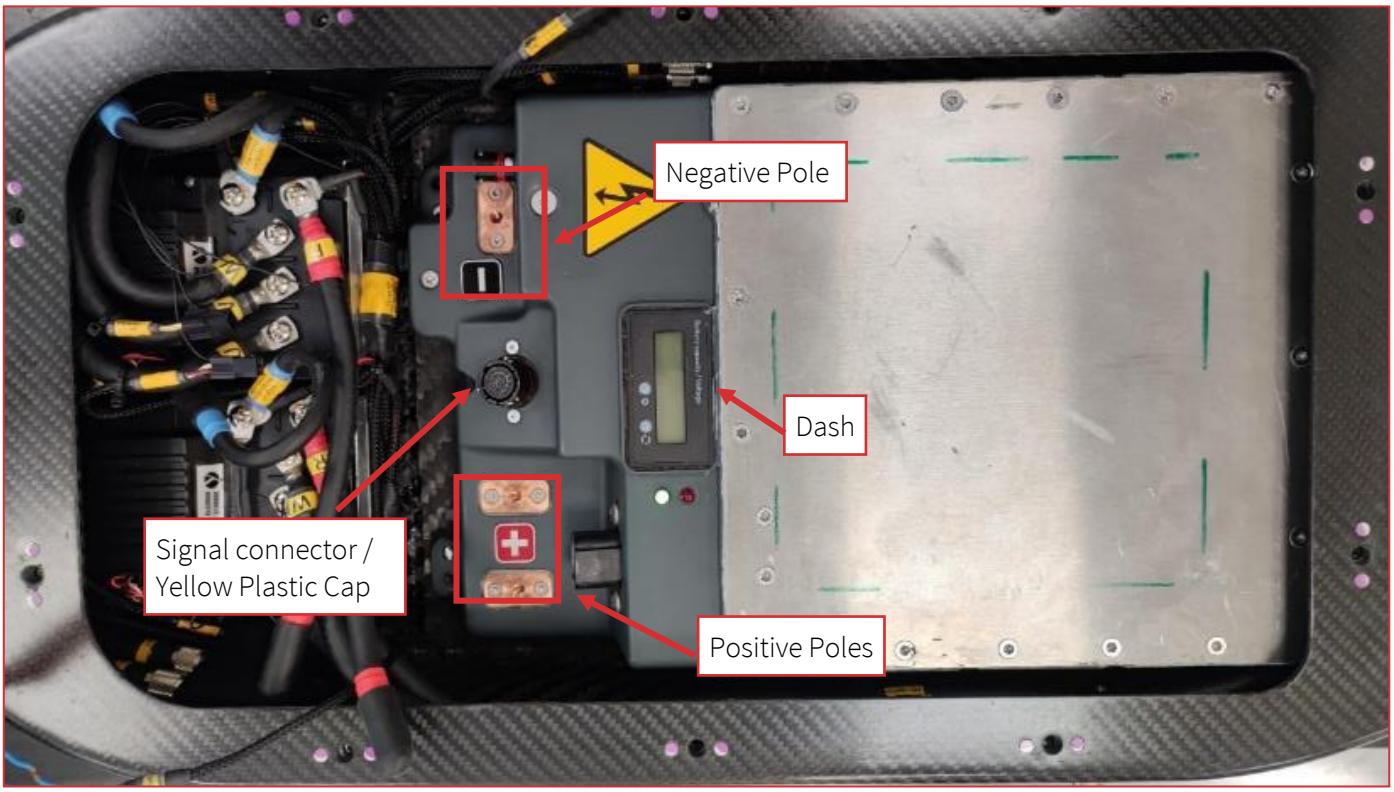

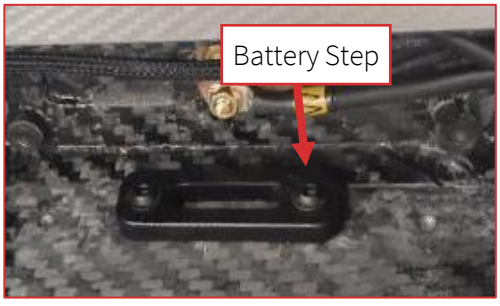

Image 17 *– Battery position*

NB:

- Before starting any installation or work, remember that there is voltage in the cables, so be careful of wrenches or tools that could generate short circuits.
- Positive cables must not cross each other and do not over tighten the screws (max 2.2 Nm)
- Remember that each motor is paired with some specific parameters on the related inverter: if you replace a motor, eSC or YCOM must update the inverter software to not affect scooter performances

1) Fit the battery into the scooter being careful not to pinch or pull any harness wires. The battery must be in contact with the battery step
2) Press the battery to make sure it is in contact with the chassis.
3) Pre-charge should now take place: Wait that the green led goes on (anyway wait at least 10sec).
4) Switch in P1 the main switch, and check if the battery dash is illuminated.
5) Switch in P0 the main switch
6) Fix the battery with the screws:
    - #2 M6x20 Front Battery (from above)
    - #2 M6x25 Rear Battery (from under the chassis)
7) Switch again in P1 the main switch and check if the battery dash goes ON otherwise check the battery position after fixing
8) Connect the power cables:
    - remove the black rubber caps and put them into a bag
    - prepare #3 M6x12 and #5 washers
    - connect both negative cables to the battery pole using a screw and one washer
    - connect the front positive cable to the positive pole for the front (the one on the right) using a screw and two washers
    - connect the positive pole for the rear (the one on the left) using a screw and two washers
9) Remove the yellow plastic cap and place the signal connector
10) Plug J1 connector
11) Move the Main Switch in P1 and wait 5s. (the dash will be lights up and the logic of the scooter will go on)
12) Move the Main Switch in P2 (the power line is engaged) and the eSkootr will be ready.

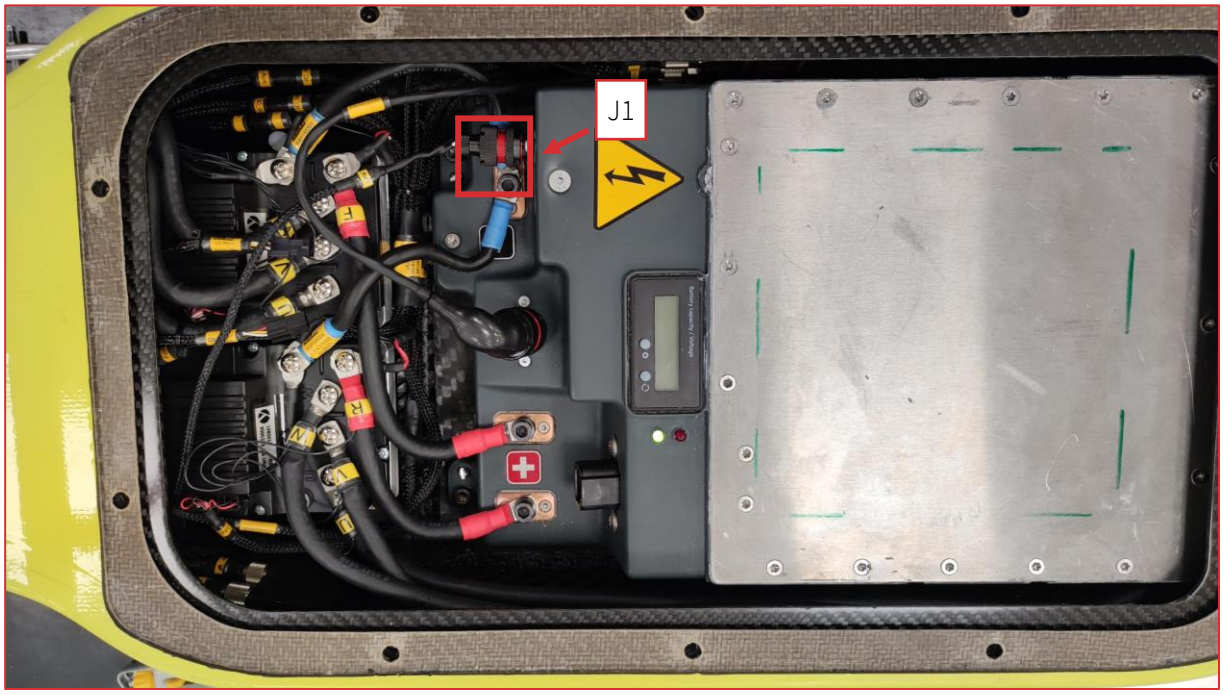

***Image 18** – Battery connected*

18.
How to Storage the Scooter

AFTER-RUN CHECKS

Based on the experience gained during the many track tests done, the checks to be done after a run are indicated below:

- Check if the brake hydraulic system has leaks
- Check that the brake discs are not bent due to the excessive heat generated during hard braking or after a crash
- Check the condition of the brake pads
- Check the brass nuts of the motor's three phases inside the chassis, both front and rear cables

AFTER-RUN PROCEDURE

When the scooter returns to the pits and does not need to be used any further, do the following:

1) Move the Main Switch in P0
2) Disconnect the power cables:
   - disconnect the positive cables to the positive pole and put on the black rubber caps
   - disconnect both negative cables to the battery pole and put on the black rubber caps
3) Remove the signal connector
4) Remove J1 connector
5) Remove the battery unscrewing:
   - #2 M6x20 Front Battery (from above)
   - #2 M6x25 Rear Battery (from under the chassis)
6) Put the yellow plastic cap and place the signal connector
7) Remove the battery onto the scooter being careful not to pinch or pull any harness wires.
8) Done

NB:

- For the battery storage please refers to WAE battery manual
- Remember that each motor is paired with some specific parameters on the related inverter: if you replace a motor, eSC or YCOM must update the inverter software to not affect scooter performances

19.
Checks during Wet or Rain conditions

PRE- WET RUN CHECKS

In addition to the above make sure that:

- Close the holes of the front and rear motor using TESA tape (or similar if it is waterproof)
- Close the holes of the footplate to avoid water leak inside the chassis if you are not using all the 10 bolts
- Make sure that all the connectors of the external wiring are protected by a transparent sheath

AFTER WET-RUN CHECKS

Based on the experience gained during the many track tests done, the checks to be done after a WET run are indicated below:

- Before removing the footplate, dry any water present paying attention to the area of the screws (using compressed air and paper) to avoid water leak inside the scooter
- Dry all the cables and connectors outside from the chassis using air compressed:
    - Underneath the footrest (rear part of the vehicle)
    - On the front part of the vehicle, steering system, dash, maps … To be sure to remove all water residues, remove the front cover of the scooter.
    - LED stripes connectors, removing the upper body
- If conditions are now dry (no rain, dry asphalt) remove the tape from the holes of the motors
- Make sure that all the connectors of the external wiring are protected by a transparent sheath

20.
Battery Charger

The charger is composed by a suitcase with a display in the front side that shows all the info regarding the charging phase and in the right side all the connectors. The charger has three cables for power, signal and electric grid connection. In addition to the connection wiring, a USB dongle is provided for Bluetooth connection via laptop and dedicated software.

Image 19 *- Charger suitcase overview*

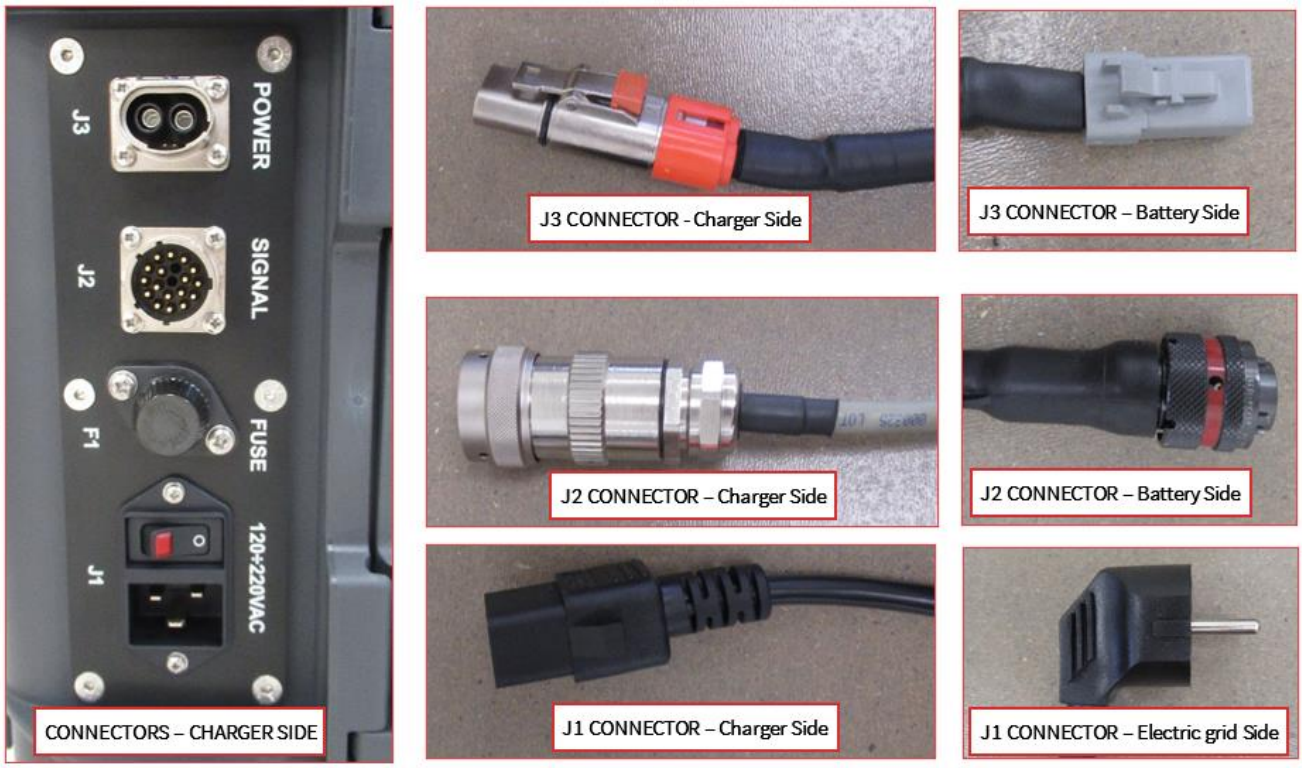

Image 20 *- Charger Connectors*

- J1 is a Schuko power socket 16A @ 250Vac with LED
- J2 is the signals connector (Souriau UT001619PH)
- J3 is the power connector (Amphenol PL082X-61-6)
- F1 is the Fuse holder 30A @600V (15A fuse mounted)

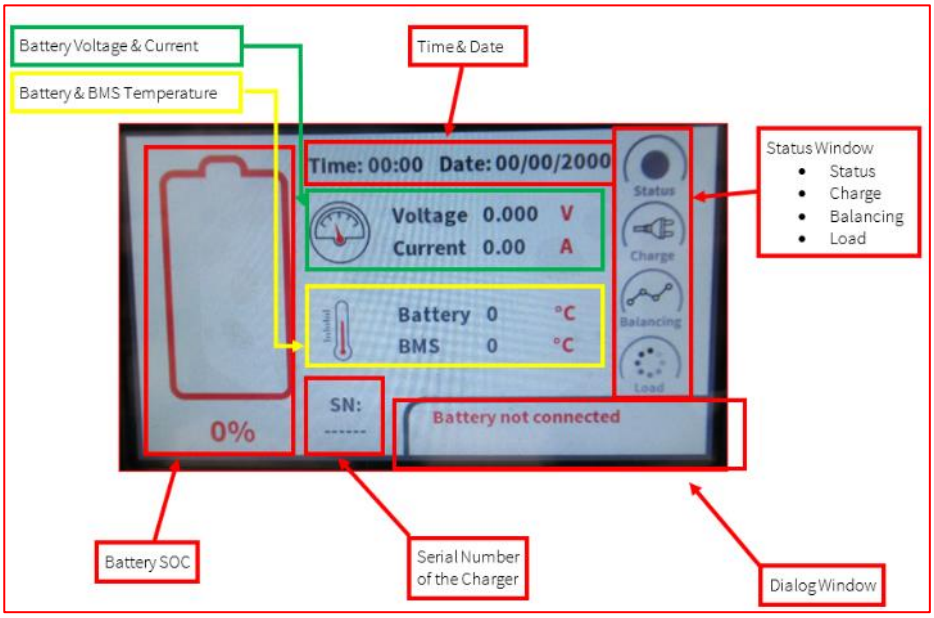

***Image 2117** - Charger's display overview*

The Status icon can be:

- Green – No issue
- Yellow – Warning
- Red – Alarm

In the Dialog Window there are two lines of text.

The first line can be shown:
System ON – The system in ON
Charging – The system is ON and charging the battery
End of Charge – The battery is fully charge

The second line shown warnings and alerts:

Message	Warning	Alarm
Min. Charging Voltage	2,5V / cell	2,4V / cell
Battery High Temp	48 °C	50 °C
Battery Low Temp. Charging	5 °C	0 °C
BMS High Temp.	80 °C	85 °C
Max Charging Current	26 A	28 A

Table 4 – Warnings & Alarms list

NB:

- Warnings do not affect the operation of the charger. Alarms intervene on the operation of the charger by interrupting the charge.

Trolley ELE0115		
Dimension	Trolley wo fan and display	399*225*554 mm
	Trolley with fan and display	399*234*554
Weight	Wo external wiring	12.5 kg
ON/OFF	Push button	yes
Charge mode	Switch	yes
Communication	Display	4.3 inch 480*272 color LCD-TFT
	Buzzer	yes
	CAN BUS opto isolated	1 channel, 250 kbps
	Bluetooth	yes
Parameters of BMS	Settable by PC	yes
Software of communication	Windows support	yes

Trolley ELE0115		
AC Input	AC input voltage range	120-220 Vac
	Nominal AC input frequency	50/60 Hz
	Nominal AC input current @ 120 Vac	14.7 A
	Nominal AC input current @ 220 Vac	8 A
AC Fuse	10.3 X 38 mm Shurter 8020.2051	15 A
Voltage	Range min/max	36 ÷ 63 VDC
	Minimum voltage measured	1 mV
Current	Maximal continuous charge current @220 Vac	25A
	Maximal continuous charge current @120 Vac	22A
	Minimum measured current	10 mA
Balance	Type of balance	Passive
	Minimum balance voltage for single cell	1 mV
	Balance current for single cell (max)	84 mA
Overcharge protection	Overcharge detection voltage	4205 mV
	Overcharge release voltage	4185 mV
Temperature	Number of sensors of temperature (cells)	1
	Number of sensors of temperature (PCB)	1
	Over temperature max detection threshold	50 °C
	Over temperature max detection release	48 °C
	Under temperature max detection threshold	0 °C
	Under temperature max detection release	5 °C
Time	Real time clock	yes
	Auto power off	15 min

Table 5 – Charger General & Electrical Characteristics

Connect the cables to charger as follow:

1. Switch **J1** must be in OFF position
2. Plug in **J3** Connector (Power)
3. Plug in **J2** Connector (Signals)
4. Plug in **J1** Connector (rete)
5. Put Switch **J1** in ON position
6. The Display goes ON

There are two ways of use:

- Monitoring
- Charging

NB:

- When using the Charger, be careful not to damage the cables or their connectors
- If the *Load* button is pressed more than 4 seconds the BMS will reset

Power ON/POWER OFF for Monitoring

1) Make sure the charger has all the cables rightly connected and turn it on
2) Connect the **J3** connector (Power) to the Battery
3) Connect the **J2** connector (Signal) to the Battery
4) Press ***Load*** button for 2 seconds and release.
5) The system goes up showing all the parameters (tension, temperatures SOC etc)
   - If you want to activate the ***Charge Phase*** press the ***Charge*** button
   - If you want to deactivate the ***Charge Phase*** press the ***Charge*** button
   - Turn OFF **J1** Switch
   - Disconnect the **J2** connector (Signal) to the Battery
   - Disconnect the **J3** connector (Power) to the Battery
6) If you want to turn off the BMS press ***Load*** button for a second

Power ON/POWER OFF directly for Charging

1) Make sure the charger has all the cables rightly connected and turn it on
2) Connect the **J3** connector (Power) to the Battery
3) Connect the **J2** connector (Signal) to the Battery
4) Press ***Charge*** button and the system goes up starting the ***Charge Phase***
5) If you want to turn off the BMS and stop the ***Charge Phase*** press ***Charge*** button
6) Turn OFF **J1** Switch
7) Disconnect the **J2** connector (Signals) to the Battery
8) Disconnect the **J3** connector (Power) to the Battery

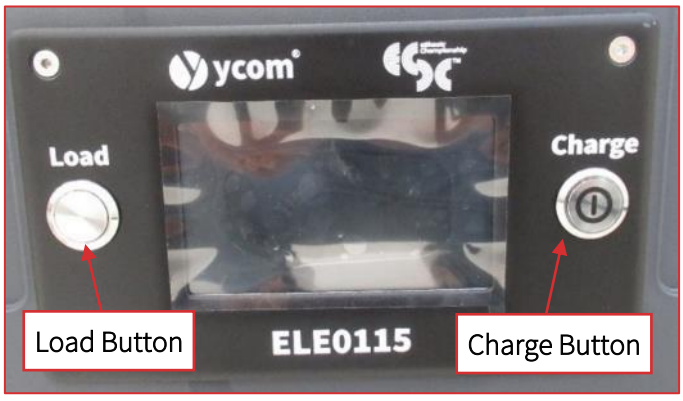

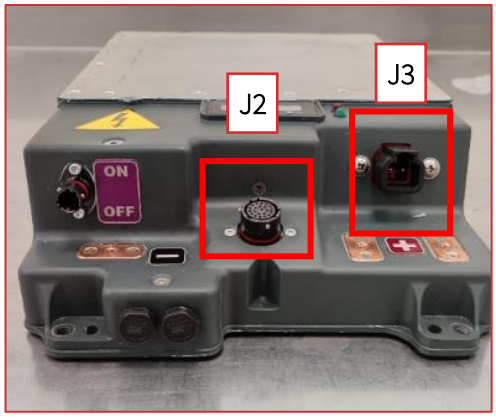

It is not necessary to monitor the charger during "charging mode"

WORKING TEMPERATURE

- The Charging phase will not start if the battery temperature is over 50°C.
- If during the Charging phase the battery temperature reach 49°C, a warning message appears in the dialog window.
- If during the Charging phase the battery temperature reach 50°C, an alarm message appear in the dialog window and the charge will stop until the battery temperature returns to be 48°C.

SOFTWARE PC FOR MONITORING DURING CHARGING PHASE

The Datalogger BMS is a PC software that allows connection between a PC and charger using the Bluetooth dongle. The feature are monitor the voltages of each single cell, the temperatures of the battery pack and the BMS, charging current, system history by viewing the registers containing the main events that have occurred over time and graphs of voltages, currents and temperatures in real time.

HOW TO INSTALL THE DRIVER & SOFTWARE

1) Download the driver here.
2) Install the driver located in *DRIVER SW PC* → *Volume* → ***setup.exe***
3) Restart the PC
4) Install the dongle Bluetooth driver located in *DRIVER DONGLE BLUETOOTH* → *windrv* as follow:
    - Do not connect the dongle to the PC. It will be connected at the end of the installation.
    - Right click on the ***dfu.inf*** file and select ***install.***
    - Right click on the ***usbserial.inf*** file and select ***install.***
5) Connect the dongle Bluetooth in the PC.
6) Restart the PC.
7) Download the software here.
8) Install ***Datalogger REV40-10 YCOM CONC PWD.exe***
9) Done

HOW TO USE THE DATALOGGER

1) Connect the dongle Bluetooth in the PC
2) Place the dongle as close as possible to the Charger
3) Start Datalogger software double clicking on the desktop icon
4) Start the Charger
5) In the main screen of the software, in the COM PORT section select the right one

6) Click the "Bluetooth" icon
7) Click the “Scan” button and select the right device

8) Click the “Connect” button
9) Return to main screen
10) Press on “Mesures”
11) Insert the password (provided by eSC)

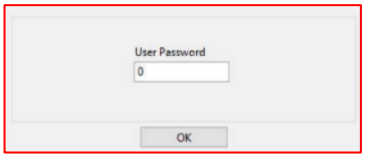

12) Done

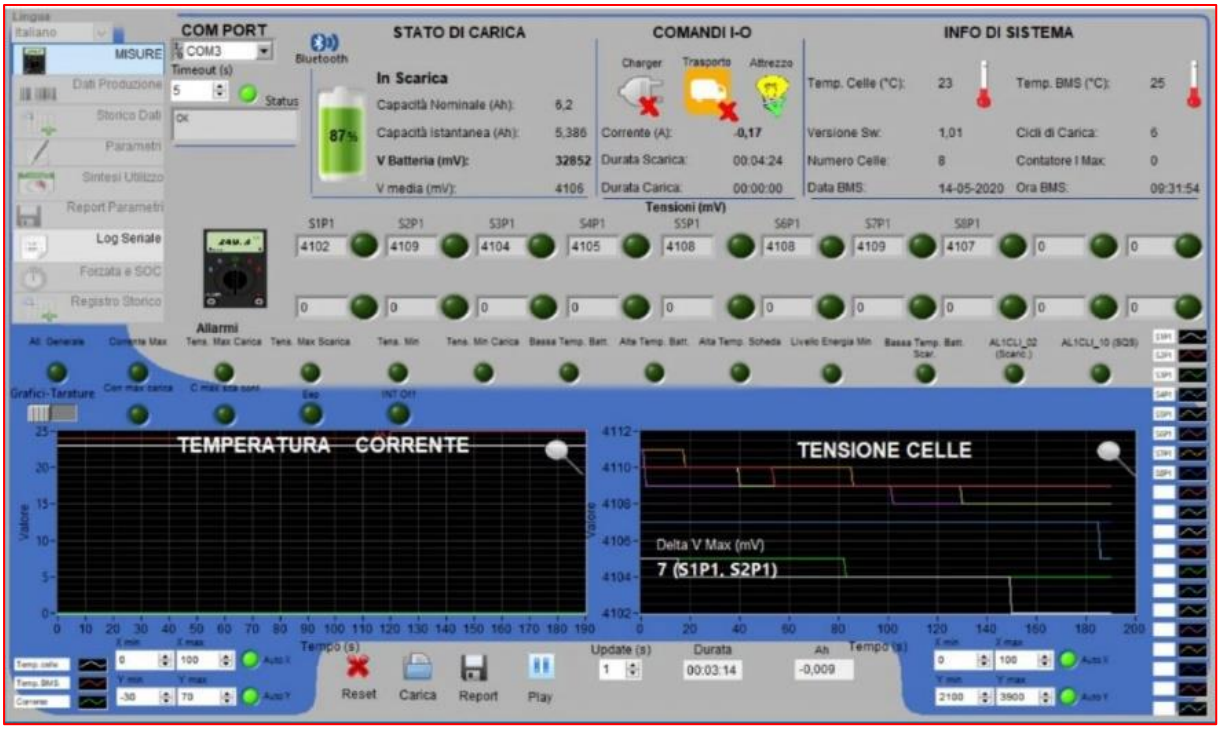

Image 22 *– Datalogger main screen*

21.
2D Logger & Dash

The eSkootr is equipped with a 2Data acquisition system composed by a logger, dash, beacon, GPS and an ANT+ sensor. For further information refer to the 2D User Manual.
Below the list of the recorded signals:

Name	Dimension	Description
Battery_Temp_Central	°C	Battery temperature read by the central sensor
Battery_Temp_Front	°C	Battery temperature read by the front sensor
Battery_voltage_F	V	Voltage of the battery that goes to the front inverter
Battery_current_F	V	Current of the battery that goes to the front inverter
Motor_RPM_F	rpm	Rpm of the front motor
TPS_F	V	Signal of the front request affected by the PWM_F
ESC_Alarm0_F	number	Front inverter alarms
ESC_Alarm1_F	number	
ESC_Temp_F	°C	Front inverter temperature. If this value reach 90 °C The current will be cutted to 30A
Motor_Temp_F	°C	Front motor temperature. If this value reach 135 °C The current will be cutted to 30A
Output_IQ_F	A	Phase current request front
input_IQ_F	A	Phase current output front affected by the TPS_F
Undervoltage Alarm F	number	Alarm that cut the current (of the front motor) to 30% if the battery voltage goes down 48V for more than 10 sec
Battery_voltage_R	V	Voltage of the battery that goes to the rear inverter
Battery_current_R	A	Current of the battery that goes to the rear inverter
Motor_RPM_R	rpm	Rpm of the rear motor
TPS_R	V	Signal of the rear request affected by the PWM_R
ESC_Alarm0_R	number	Rear inverter alarms
ESC_Alarm1_R	number	
ESC_Temp_R	°C	Rear inverter temperature. If this value reach 90 °C The current will be cutted to 30A
Motor_Temp_R	°C	Rear motor temperature. If this value reach 135 °C The current will be cutted to 30A
Output_IQ_R	A	Phase current output front
Input_IQ_R		Phase current output front affected by the TPS_R
PWM_R	%	Percentage of the total available current rear affected by MAP_F
PWM_F	%	Percentage of the total available current front affected by MAP_R
Alarm	code	SCU Alarm
P_Front	bar	Front brake pressure
P_Rear	bar	Rear brake pressure
Map_F	number	Number of selected maps for the front motor
Map_R	number	Number of selected maps for the rear motor
Warning_F	number	SCU warning messages
Warning_R	number	
HRM_BeatCnt	number	heart beat count

HRM_BeatRate	number	heart beat rate
SensorContactStatus	number	Number that identifies HRM sensor is connected (6=no connection - 22=connection)
Throttle_SCU	%	Throttle demand
BOOST COUNT	s	Seconds of remaining Boost
BOOST KILL	number	Number that identifies if boost or kill is pressed (1=Boost 2=Kill)
Undevoltage Alarm R	number	Alarm that cut the current (of the rear motor) to 30% if the battery voltage goes down 48V for more than 10 sec
V_Sat	km/h	GPS Scooter speed
Acc_lat	m/ss	Lateral acceleration of the scooter (calculated)
Acc_lon	m/ss	Longitudinal acceleration of the scooter (calculated)
Rollangle	Deg	Lean angle of the scooter (calculated)
V_Scooter	km/h	Scooter speed (calculated)
SCU Serial Number	number	Serial number of the SCU installed in the scooter
BoP Coeff	number	Balance of Performance coefficient applied in the SCU
Map Limit BoP	%	Percentage of the map available after the BoP equalization
BOOST Limit BoP	%	Percentage of the Boost available after the BoP equalization

***Table 6** - List of recorded channels*

DASH

The Dah has 3 different pages:

Page 1 going up when the scooter is turned ON (Main Switch in P1) and shows all the basic info:

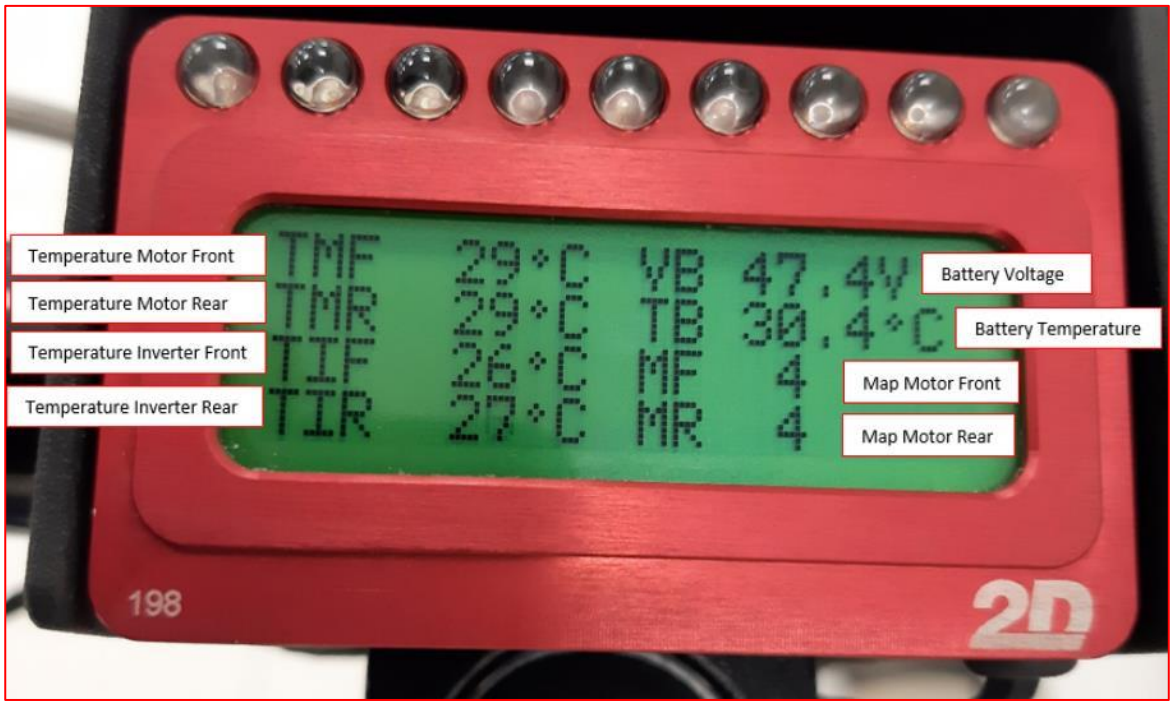

***Image 23** - Page 1 that shows all basic info's of the eSkootr*

In this page the upper LEDs light up if the rider turns the throttle.

Page 2 is shown when the scooter goes over 10 Km/h and shows the selected maps (front and rear), the voltage of the battery and the remaining boost seconds. In this page, the LEDs light up if there is a temperature alarm (showing a text message).

Page 3 goes up when the scooter overpasses the lap trigger. Shows the actual lap time and the gap compared to the best and stay for few seconds. In this page RED LEDs (first two on the left side) light up if the scooter is slower than the best lap, otherwise the GREEN LEDs light up (last two on the right side). After that, if the scooter goes over 10 Km/h the dash automatically switches to Page 2 otherwise in Page 1.

22.
eSkootr Functionality

All the scooter controls are in the handlebar. What the rider can manage is described below:

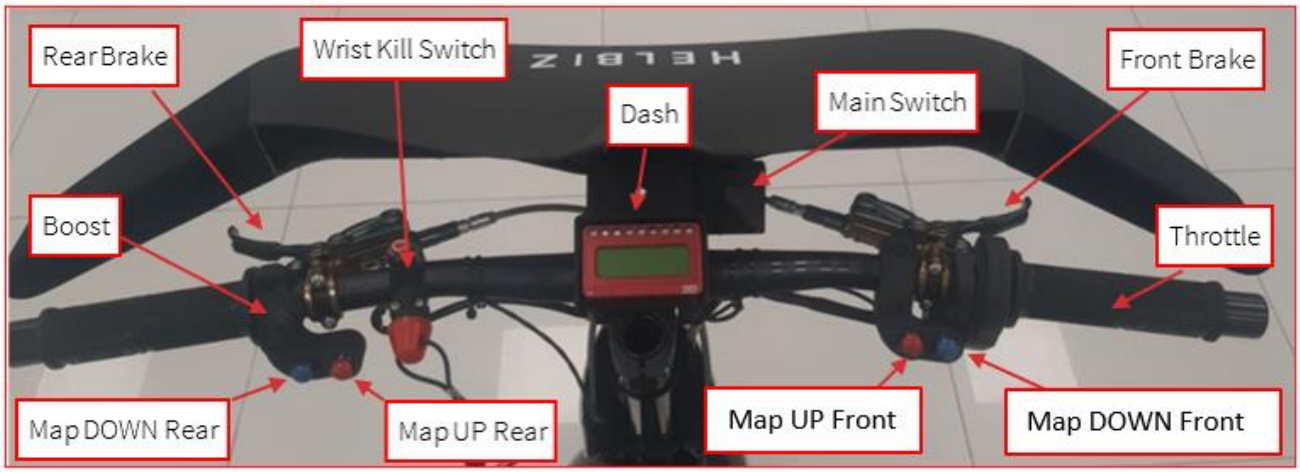

Image 24 *- Handlebar overview*

MAP UP

The Map Up button (red button) changes the motor map (front or rear depending on which button is pressed) from the current one to the next by increasing the available current. The number of current map is shown in the Dash. The higher map number that can be selected is 5.

MAP DOWN

The Map Down button (Blue button) changes the motor map (front or rear depending on which button is pressed) from the current one to the previous by decreasing the available current. The number of current map is shown in the Dash. The lower map number that can be selected is 1.

BOOST

The Boost button (Black button on the left side of the handlebar) raise the available current of the selected map (max 80%) to 100% instantly. The boost function is not infinite but is limited to a certain number of seconds established by the organization before each race.

WRIST KILL SWITCH

The wrist kill switch has a bracelet that must always be worn by the cyclist before any ride. If the red switch button is pressed or the red cap is disconnected from the main body, the scooter will shut down. If you reconnect the red cap or stop pressing the red button. the scooter wakes up.

SAFETY STRATEGY

In the event of a throttle failure, a safety strategy has been implemented. Operation consists in deactivating the throttle signal if the sum of the braking pressures exceeds 40 bar and the throttle signal is over 70%. If the safety strategy is activated, the throttle signal is canceled (value = 0) and reactivated only if the rider's request is lower than 10%.

Signal Logic Scheme

DEVICE

SIGNAL

Throttle

0-100%

SCU

[1]The signals are affected by MAPS or Boost

L O G I C

PWM_F

PWM_R

[1]0-100%

TPS_F

TPS_R

[1]0-4500mV

Input_IQ_F

Input_IQ_R

0-120A

INVERTER

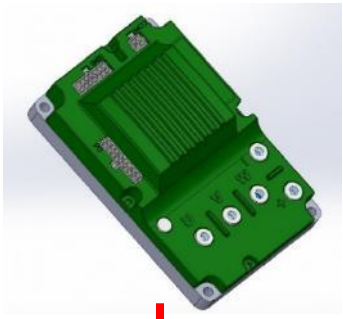

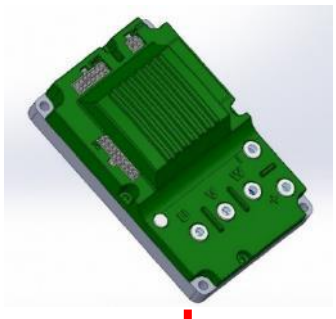

[2]The difference between input and output depends on the internal controls of the individual inverter (alarms, limits,

Output_IQ_F

Output_IQ_R

[2]0-120A

23.
SCU

SCU (Scooter Control Unit) is a single processor unit working as interface between rider and motors. It allows processing input signals and determine the amount of thrust to get from each motor. Together with various control functions, safety features are also implemented to protect rider against consequences of sensor failures.
An internal diagnostic is available to monitor the status of main sensors and detect potential faults.

System architecture:

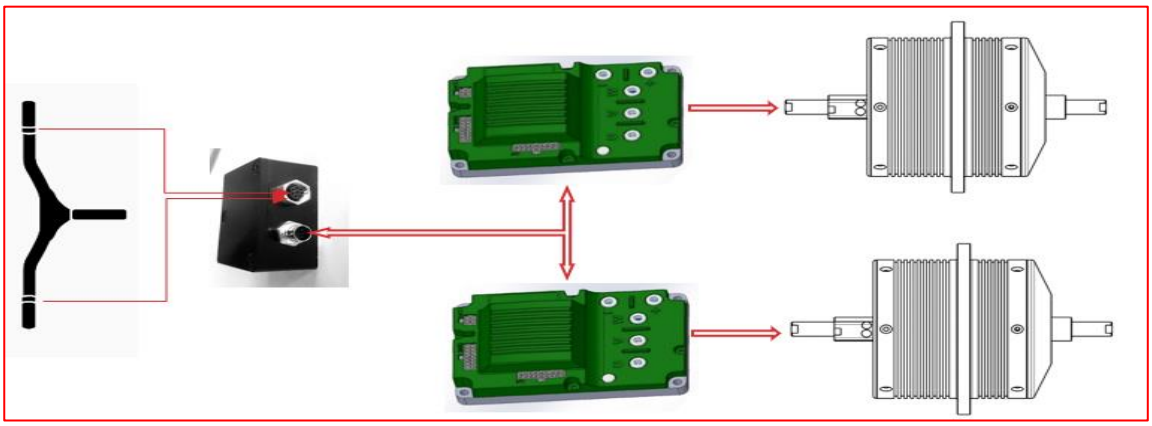

SCU provides USB PC connectivity to configure the system, monitor its functions and update firmware

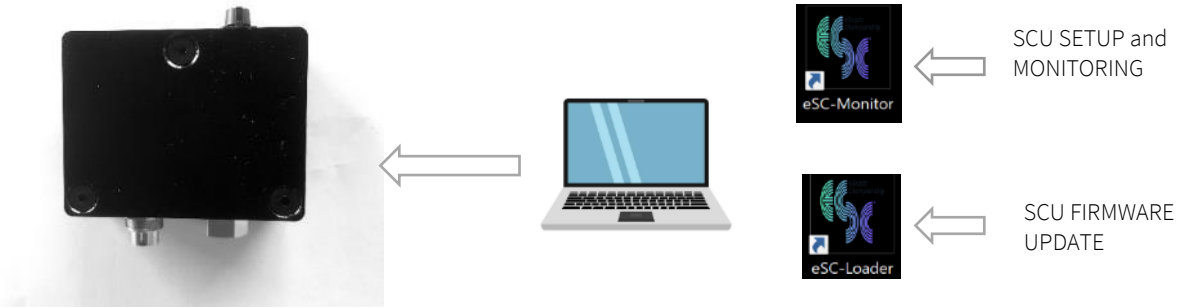

SPECIFICATION

Electrical and I/O:

- Supply Voltage: 7V ÷14V dc 1.5A
- External Sensor Supply: 5V dc 1.2A with overcurrent protection
- n.5 5V Analog Inputs (1xThrottle, 2xBrake pressures, 2xMap selection)
- n.2 0-5V Digital inputs (1xBoost, 1xKill)
- n.1 0-5V Digital output (Rain Light)
- n.2 0-5V Analog Outputs (1xFront Inverter Demand, 1xRear Inverter Demand)

Interfaces:

- n.1 USB (PC connection)
- n.1 CAN (1Mbit/s)

Environmental:

- IP67
- Maximum Working Temperature 80 degC

FEATURES

- Mappable relationship between throttle demand and inverter torque demand
- Independent Front/Rear maps
- Map breakpoints can be modified each 10% throttle demand step to achieve a non-linear shape
- Boost demand configurable (maximum 100%)
- Boost hold time counter configurable (max 200 s)
- Safety control through detection of throttle failure and braking action
- Diagnostic on sensor signals SCU setup, functions diagnostic monitoring through PC application (eSC Monitor)

23.1 – SCU management

NB:

- *Fw release **up to 1.13** require the **SCU monitor Team 1.1***
- *Fw release **from 1.14** require the **SCU monitor Team 2.0***

1) Set the scooter in P0
2) Connect the USB cable of the SCU to the PC and to the SCU
3) Go back to P1
4) Open SCU Monitor clicking on the desktop icon:

5) Open the software and:
   - Select the right COM Port as follows:

I. Windows Start Menu -> Setting -> Devices -> Devices and Printers -> -> Right Click on icon-> Properties -> Hardware ->

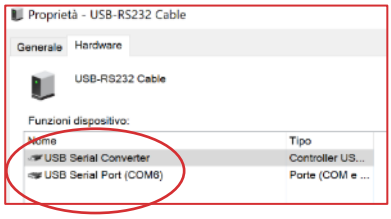

II. The COM port needs to be then selected on each app setup menu: eSC-Monitor: -> select COM port from drop down list -> X to exit and save.

III. eSC-Loader: Setup -> 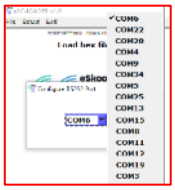 -> select COM port from drop down list -> X to exit and save.

IV. If the USB-RS232 cable is not seen as a virtual COM port update the drivers clicking on the file *CDM212362_Setup.exe* and continue with other steps.

- Click on the Monitor icon

6) On the SCU Monitor, check:
   - Throttle going from 0 to 100%
   - Map going from 1 to 5 using selector on the scooter
   - Brake Pressure sensor front, and rear are correctly connected
   - Boost signal goes from

   - Kill signal goes from

   - Boost Count
   - BoP Coefficient

MAPS SETUP AND CHECK

Each map (maximum 5 for each motor) can be set and shaped graphically. Each 10% throttle step can have its output (%) selected through mouse cursor, simply by clicking on the desired value. User can therefore set 10 map breakpoints individually for each map, whilst a linear interpolation will be automatically applied between those breakpoints.
It's important first to select the map number acting on external map selection buttons.

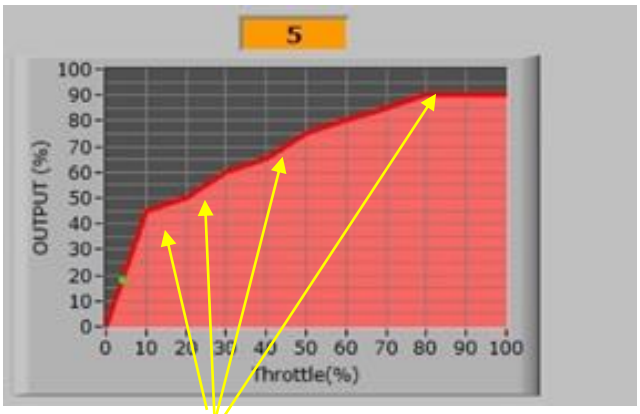

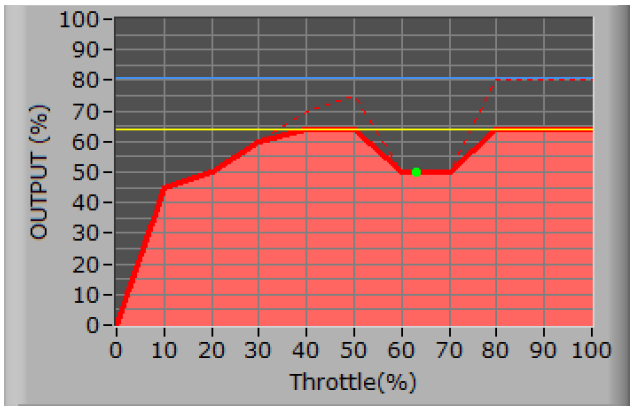

Once the map has been defined, it's possible to check output demand compliance by moving throttle from 0 to 100 % and verifying green dot position on the map.
User can define separately 5 front and 5 rear maps. Maps are stored into SCU internal flash memory.

In defining each map, if the demand level exceeds Maximum Bop Map limit (see yellow line on graph), the applicable demand will be capped and plot with continuous red line while the part of the same map exceeding the Bop level will be still plotted but with dashed line (to highlight that it cannot be applied).

MAP SAVING AND IMPORT

In support to a quick map upload, user can save maps into file and retrieve them. To do that user needs to select File from top menu and save to create a new map file or Load to retrieve an existing map file.
Below and example of the file created whit map export:

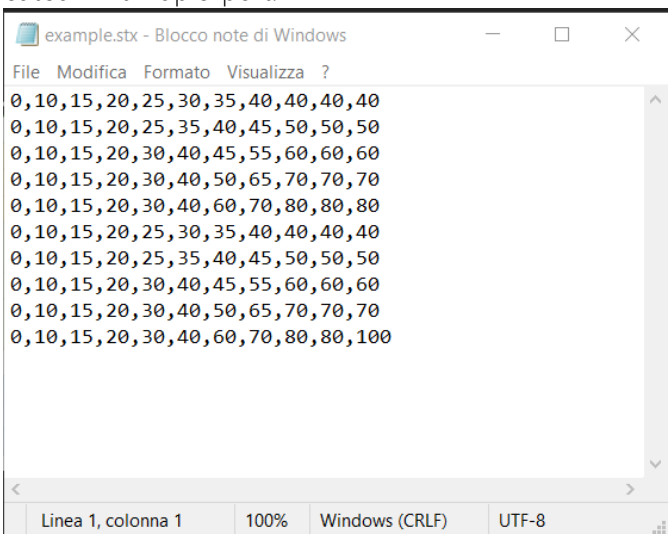

This allows to build a map file database and change maps setting quickly.

If you want to update the ***Maps*** in the SCU:

1) Set the scooter in P0
2) Connect the USB cable of the SCU to the PC and to the SCU
3) Go back to P1
4) Open SCU Monitor clicking on the desktop icon:

5) Open the software and:
   - Select the right COM Port
   - Click on the Monitor Icon
6) Go in *File* → *Load*
7) Select the right file (***.stx***)
8) Click Enter
9) Set the scooter in P0
10) Done.

THROTTLE

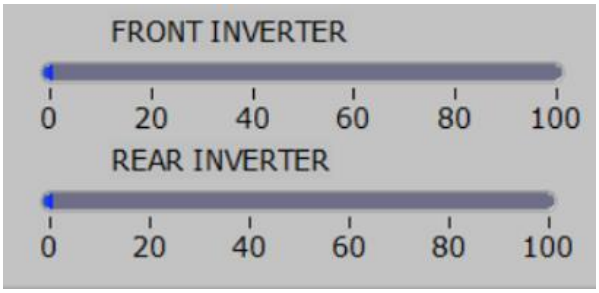

The blue bars showed above correspond to the throttle command. With this the power demand, according the map setup, can be checked.

BOOST FUNCTION

Boost function is implemented with the purpose of changing inverter demand stepping from the current determined by throttle position and selected map to a constant value. This value cannot be defined by the Team (only by eSC). Boost activation is highlighted with the green window (see below). Boost target demand in % (as set by eSC) can be checked by selecting the “Info” menu at the top of the panel window.

Boost BoP Demand is always plot with a blue line on each front and rear map plots.

Use of boost function is also limited by the total amount of time the button had been pressed. Every second the boost is pressed this value will decrement until reaching zero.
At that point boost function will not be active anymore.
Also, this Boost Time value can be found in the Info menu.

KILL FUNCTION CHECK

Kill demand function can be simply checked through the KILL windows that will become green if the kill function is active. Kill function active means that both front and rear motors demand will be forced to zero.

READING DIAGNOSTIC STATUS

Diagnostic is active for the following inputs:
-Throttle (sensor disconnected)
-Map selection Front and Rear
-Safety Status active (throttle stuck open)

The possible error status is flagged on the relative window with a red background as shown below (for throttle error). No errors status is displayed with a green background.

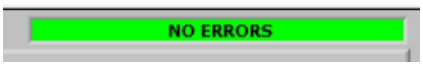

SCU diagnostic is only highlighting the possible error status and it does not take actions against it.

24.
Inverters

The eSkootr uses 2 inverters to control front and rear motor.

NB:

- Remember that each motor is paired with some specific parameters on the related inverter: if you replace a motor, eSC or YCOM must update the inverter software to not affect scooter performances

NB:

- Max torque for inverter screws: max 2.2 Nm

NB:

- If inverters are disassembled from the heatsink before reassembly always add Aluminium Oxide thermal paste (3.5 W/mK) between inverter and heatsink

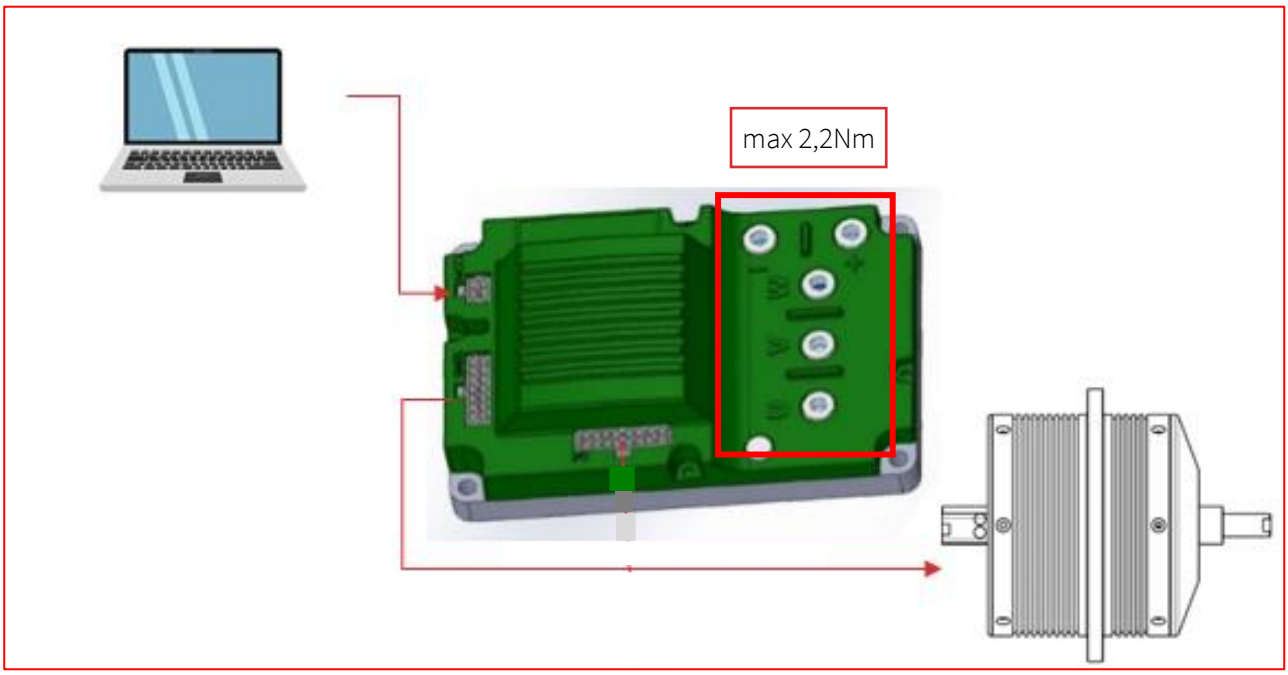

Image 2518 *- Inverters wiring and connection*

25. Workbench

The workbench is a container like a light flight case, which integrates several functions and parts like:

- Workbench to work on the scooter
- 2 tables
- Rear stand
- Central stand with the motor for scooter motors cooling
- Dry ice box for the motor cooling
- Plugs and cables

For the transportation, the workbench can accommodate inside all the elements of the kit and the battery charger trolley too.

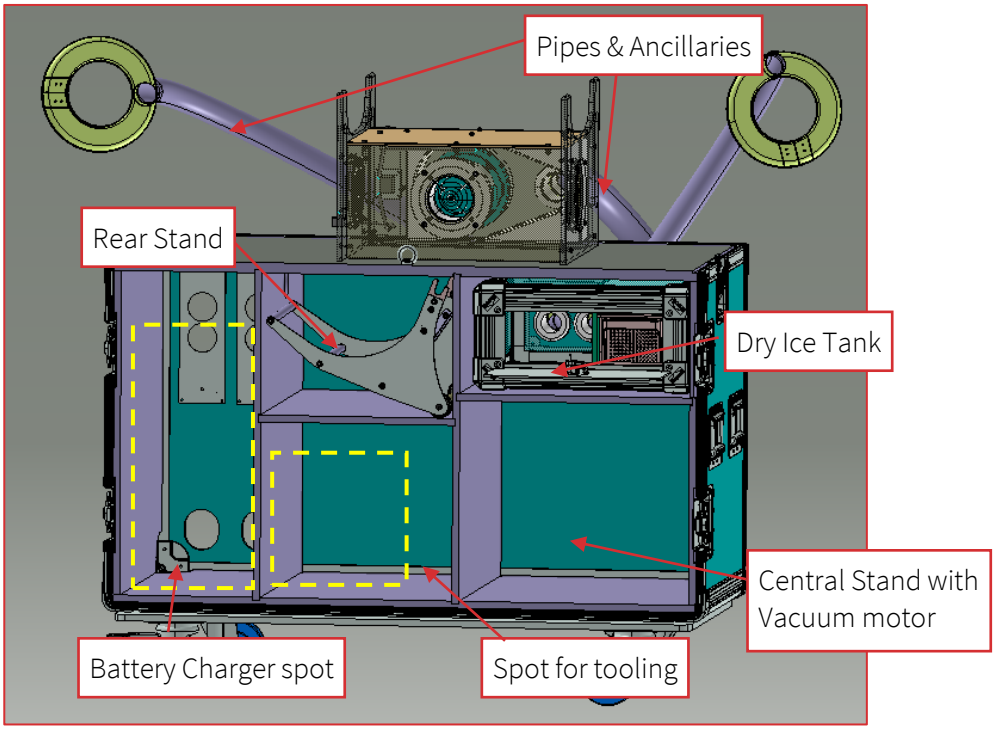

***Image 26** - Workbench overview*

The top and side panel, once removed, can be used as 2 standalone tables. Removing the top panel, the height of the workbench when you are working is 765mm.

Image 19 *- One of the two tables of the workbench*

The inputs are with 2 sockets of 220V 16Amp, in this way each one of the 2 multiple sockets (SCHUKO) of the workbench can supply up to 3.500W.

To supply power to the workbench and all the devices it's enough to plug in 2 extensions cords, in the kit there are 2 cables of 10m each.

Image 2720 *- Connections and accessories of the workbench*

- The power of the central stand with motor is ≈ 1100W
- The power of the battery charger is ≈ 1800W
- The power of the blower is ≈ 2500W

HOW TO USE THE COOLING SYSTEM

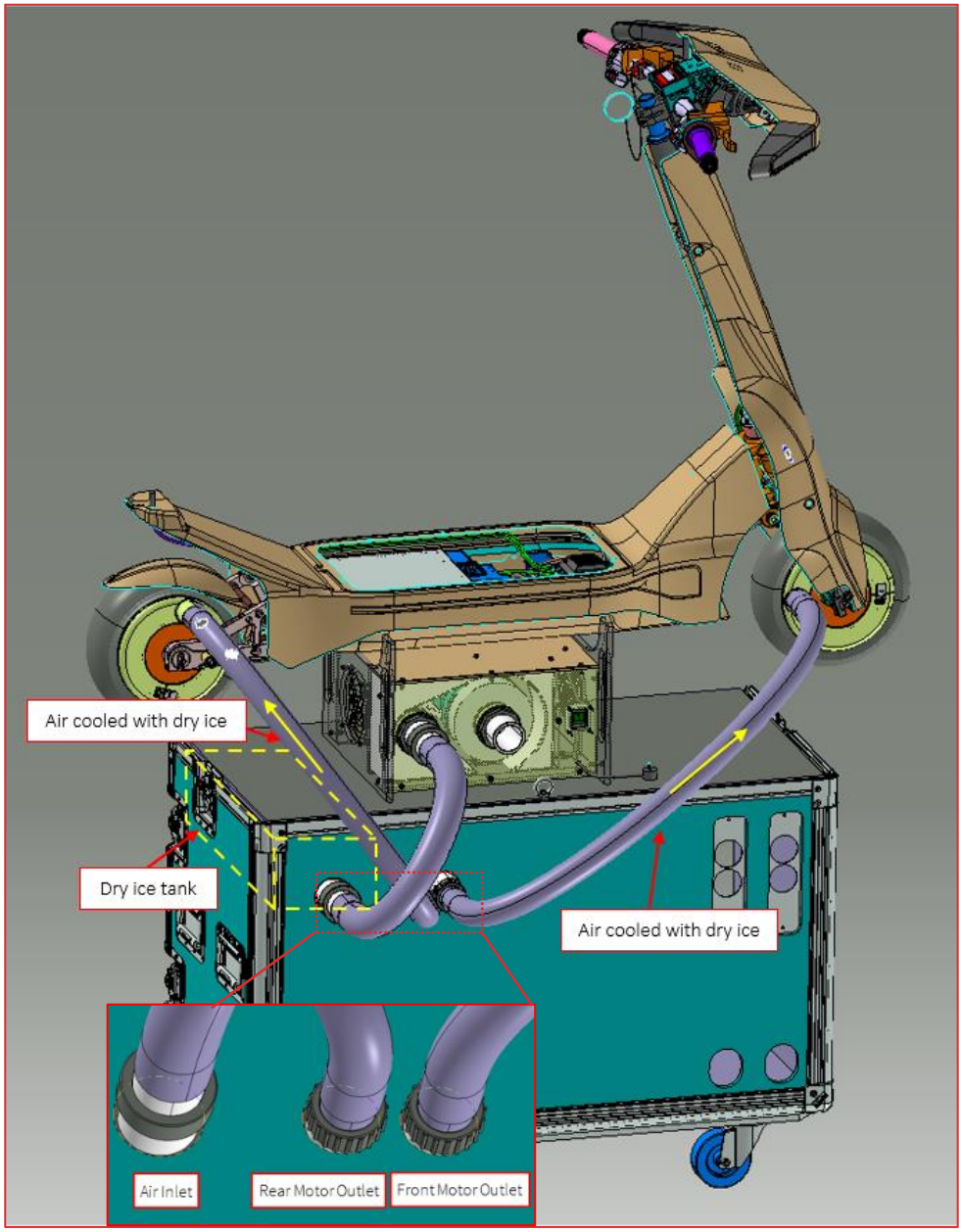

Image 28 *- Piping connections*

After connecting the workbench to the electrical net (via industrial sockets – IN) and connected the motor of the central stand to the schuko sockets (OUT):

1) Put the scooter on the stand
2) Connect all the pipes
3) Connect the cooling system on the motors
4) Put dry ice in the tank (if needed)
5) Turn on the cooling system

NB:

- For battery cooling refer to WAE manual
- Be careful when handling dry ice. Use appropriate protective gloves and goggles. Don't breathe it.

26.
Led Stripes

Procedure to change the LEDs color:

1) Press and hold the boot button of the DC/DC converter while switching from P0 to P1 the scooter main switch to enter in the setup mode
2) Turn the screw to adjust the color. The color sequence is reported in the table below
3) Do a power reset of the scooter
4) At restart led will be at the chosen color

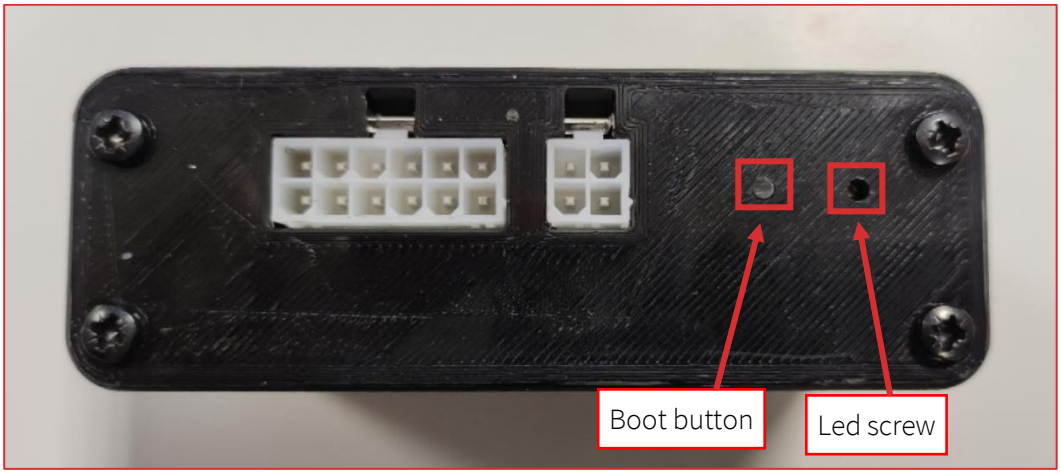

***Image 29** – DC/DC box*

ff 00 00	
ff 2a 00	
ff 55 00	
ff 80 00	
ff aa 00	
ff d5 00	
ff ff 00	
d4 ff 00	
aa ff 00	
80 ff 00	
55 ff 00	
2b ff 00	
00 ff 00	
00 ff 2a	
00 ff 55	
00 ff 80	
00 ff aa	
00 ff d5	

00 ff ff	
00 d5 ff	
00 aa ff	
00 80 ff	
00 55 ff	
00 2a ff	
00 00 ff	
2b 00 ff	
55 00 ff	
80 00 ff	
aa 00 ff	
d4 00 ff	
ff 00 ff	
ff 00 d4	
ff 00 aa	
ff 00 80	
ff 00 55	
ff 00 2b	
ff ff ff	

Table 7 - LED Colors

27.
Bag for transportation

Each scooter has a semi-soft carrying bag. The bag is composed by 4 pieces:

Image 3021 *- Transportation bag overview*

To insert the scooter inside the bag it is necessary to disassemble:

1) Front cover
2) Steering column. If necessary, cut the plastic clamps that hold the wiring
3) The handlebar, removing the stem from the steering column. During this operation pay attention to the wiring
4) Disassemble the wirings is not needed.

After disassembly, place the components in their bags as shown in the following images:

Image 3122 *- Items in the proper bags*

After that put the bags and the eSkootr inside Main bag as follow:

1) Put the Front cover bag in the bottom of the main bag (Yellow Line)
2) Put the Steering Column bag on the front cover bag (Green Line)
3) Put the eSkootr inside the bag with the rear stand
4) Close the main box

Image 32 *– Positioning inside the main bag*