BATTERIELEKTRONIK

ProSurge®

Grov/mellanskydd – KLASS I + II BPS12.5V/275(-S)/3P

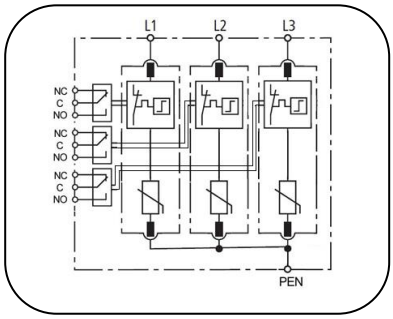

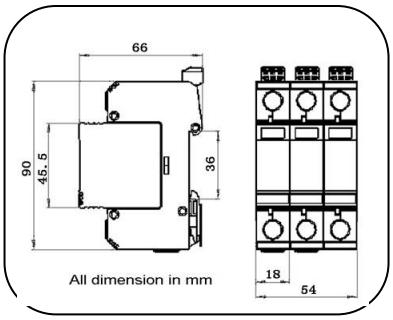

CE

Kretsschema varistorteknik

Måttritning

Typ I + II. Grov/mellanskydd. Överspänningsskydd för lågspänning. Uppfyller kraven i åskskyddsstandarden SS-EN 62305, skyddsklass III –V.

- Typ I + II. Överspänningsskydd i enlighet med IEC 61643-11, UL 1449, för TN-C system
- 18mm plug-in modul
- Tålighet 12.5 kA(10/350µ s) per pol
- Tålighet 80 kA(8/20µs) per pol
- Jackbart överspänningsskydd för DIN-montage
- Felindikering genom röd indikationsflagga i fönstret
- Snabb respons med växlande signalkontakt

Part No.		BPS12.5V/275(-S)/3P
In accordance with		IEC61643-11:2011; UL1449-4th
Category IEC/VDE		I+ II / B+C
Max. continuous operating voltage (V)	(AC/DC)	275/350
Nominal discharge current(8/20) In	L–PE	25kA
Max. discharge current(8/20) Imax	L-PE	80kA
Lightning impulse current(10/350) Iimp	L-PE	12,5kA
Voltage protection level	@In	<1.5kV
	@VPR	<1.0kV
Response time	L-PE	≤25 ns
Follow current	L-PE	Nil
Backup fuse(only required if not already provided in mains)		200A gL/gG
Operating temperature range		- 40ºC ~ + 80ºC
Cross-section of connection wire		Single-strand 35mm^2; multi-strand 25mm^2
Mounting		35mm DIN-rail in accordance with EN 50022/DIN46277-3
Enclosure material		thermoplastic; extinguishing degree UL94 V-0
Degree of protection		IP20
Installation width		3 modules, DIN 43880
Thermal disconnector		Internal red - failure
Remote alarm contact		Optional
Approvals, Certifications		CE
Additional data for Remote Alarm Contacts		
Remote alarm contact type		Isolated Form C
Switching capability Un/In		AC: 250V/0.5A DC: 250V/0.1A; 125V/0.2A; 75V/0.5A
Max. Size of connecting wire		Max. 1.5mm^2(or # 16AWG)