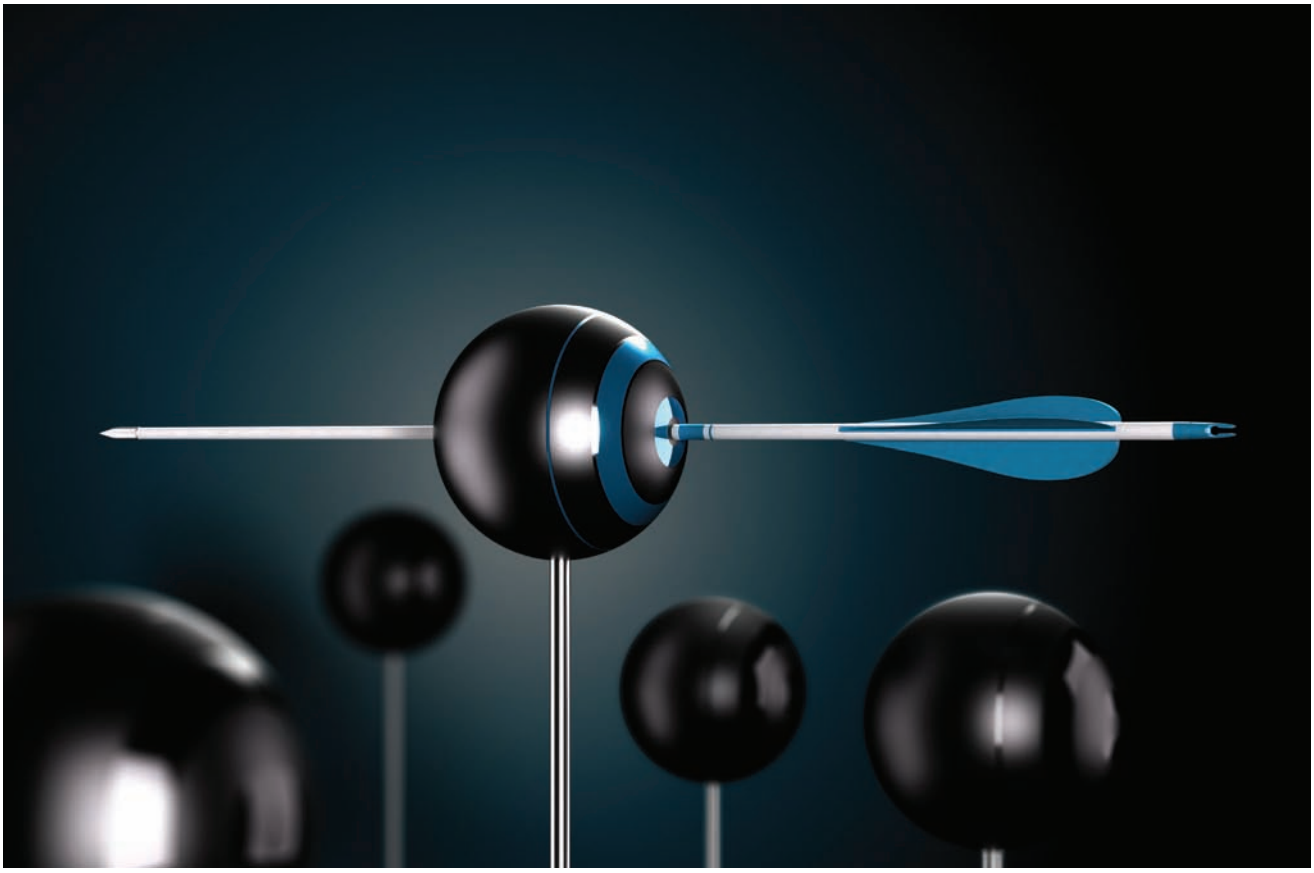

Manufacturing Precision in Five Axis

Arthur Turner, Rainford Precision

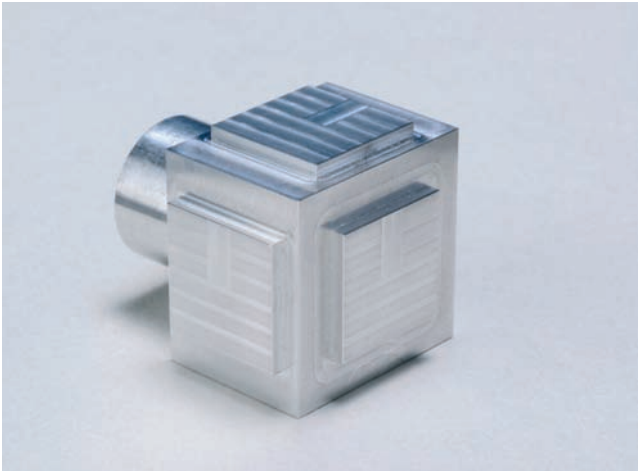

<< Figure 1: Visualisation of Precision: manufacturing precision in five axis — 2 µm steps are intersected by a 5 µm groove at an angle of 90°, done in table positions: B0, B90+C0, B90+C90 on a KERN Micro Machine. >>

One of the great debates in machining is how to confirm the accuracy of a machine when working with tilting and swivelling tables. The reluctance of machine tool companies to specify accuracies in this form of operation is defended if we discuss the accuracy of component set up and the initial setting of the kinematics of the machine. The kinematic setting is the dimension from the centre of the swivel point of the table to the reference position of the machine. The pre-set dimension is from the swivel point of the table to the clocking position of the workpiece datum. These two dimensions have a major impact on the accuracy of machining achieved, the larger these distances are, the greater potential for inaccuracy, therefore the shorter the distances, the more accurate the machining should be. Finally, another feature to be taken into consideration for workpiece accuracy is how square the clamping table face is to the spindle axis movement.

One easy and simple test is the KERN–Step test, which involves inserting a bar into a collet chuck on a five axis machining centre and machining three adjacent faces. In simple terms, five steps are machined on one face with a height difference of 2 µm, then a groove is milled in the steps that is 5 µm deep off the top face

One easy and simple test is the KERN–Step test, which involves inserting a bar into a collet chuck on a five axis machining centre and machining three adjacent faces.

<< Figure 2: KERN Micro Machining Centre. >>

>> Continued on page 26

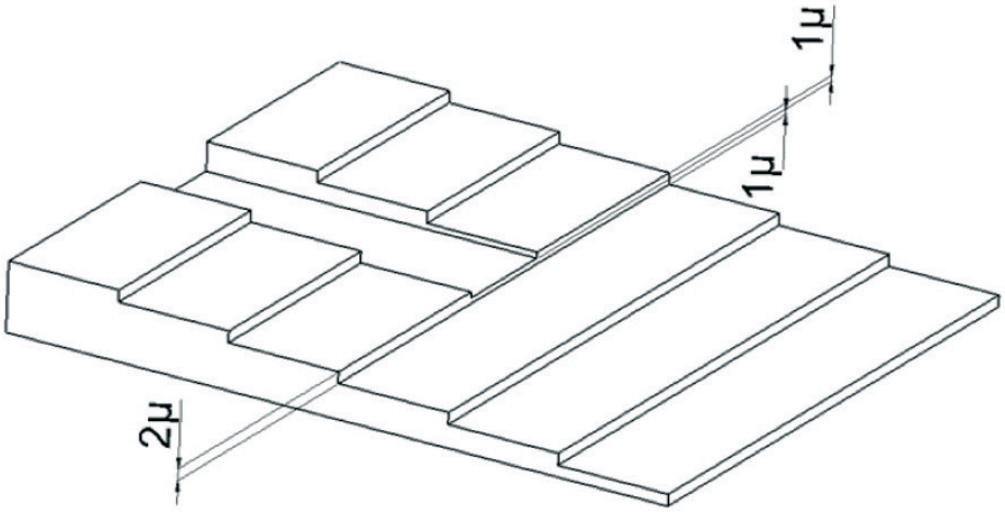

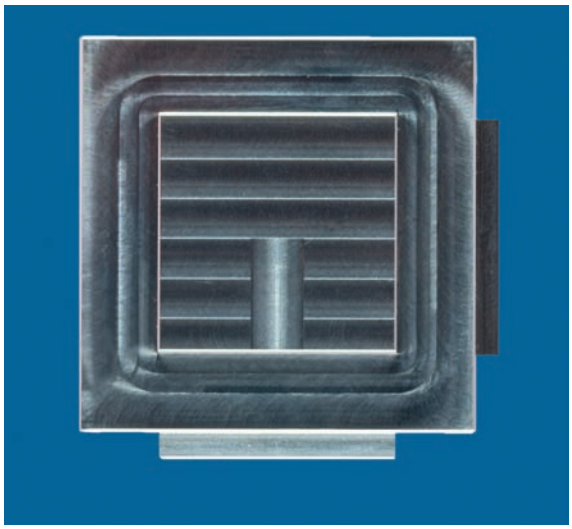

<< Figure 3: **Step test tube.** >>

but at 90° to the steps, thus off the second step the groove is only 3 µm deep and off the third step only 1 µm and it does not touch the fourth step. Initially this simple operation shows the accuracy of three axis machining.

Having completed the first face, the table is indexed by 90° and the machining operation is repeated on the second face. Having to repeat the 2 µm steps and the groove, the machine's actual capability becomes apparent.

Finally the table is tilted by 90° so that the third face to be machined is adjacent to the two previously machined surfaces. The step and groove machining is repeated. On all three faces look at the third and fourth steps. On the third step the groove should be 1 µm deep and you should not see any tool marks on the fourth face. Now you should be really impressed that such a simple machining trial should produce outstanding results.

On a recent trip by UK customers to KERN one comment that was heard was: "I can understand producing such a test piece as a one-off, but I've just seen ten identical parts machined as a production process — that's impressive."

Having high accuracy tilting and rotating axes is a standard feature for KERN further enhanced on their Micro Machining Centre with a patented design for ensuring the table is true to the spindle axis movement. Possibly the name 'Micro' disguises its true capacity for workpieces of 350 mm diameter and 220 mm tall with a standard tool holding capability of 101 tools with an HSK25 spindle or 90 tools with a HSK40 spindle.

Customers demand 'process capability' to minimise operator involvement in the production of a batch of components and with the KERN Micro that is what they get.