PROCESS INDUSTRY

OsecoElfab

LoKr™

TECHNICALLY ADVANCED LOW K_R RUPTURE DISC

The Next Generation of Design and Engineering in Pressure Relief Technology, *delivering superior performance, reliability and accuracy.*

A **Halma** company

The LoKr disc improves process performance

Delivering a best-in-class Flow Resistance Factor (FRF) or K_R, the LoKr is a highly engineered rupture disc. The advanced design maximizes pressure relieving performance while providing superior reliability and extraordinary service life.

1 BEST-IN-CLASSS K_R VALUE

- Creates opportunities for increasing efficiency and throughput
- Minimizes line sizes for rupture discs installed in-series with PRVs, with no loss of performance or efficiency, at low flow rates
- Makes it easier to keep pressure drops across the relief line below 3%
- Helps prevent valve chatter

2 USE AS A SINGLE-DISC SOLUTION

- Sizes and pressure ranges cover the majority of applications in the plant
- High-cycling and high temperature capabilities for superior reliability and long service life, even in the toughest applications
- Reduce inventory of holders and discs required in the stock-room

The LKr holder supports accurate, full-bore opening

When used together, the LoKr disc and LKR holder create a leak-tight unit that improves safety and efficiency by reducing opportunities for leak paths within the plant. Standard holder materials are Carbon Steel, Stainless Steel 316/316L, Inconel 600, Monel, and Hastelloy C-276

3 EASY TO INSTALL

- Tapered seal design makes installation easy
- Non-torque sensitive
- Insert and pre-torqued designs available
- Fits most standard heights and flange sizes

4 SUPPORTS A LOW K_R VALUE

- Knuckle in outlet enables full-bore opening on burst

TECHNICAL SPECIFICATIONS

Size range	1"-12" (25-300mm)
Burst pressure range	10-2,500 psig (0.69-172.3 barg)
Temperature range	-120°F to 1000°F (-84°C to 538°C)
Standard materials	Hastelloy® C, 316 Series Stainless Steel, Nickel, Inconel® 600, Monel®
K_R Value	K_{RGL}: 0.22
Max. Operating Ratio	95%
Performance Tolerance	+/-5%
Manufacturing Range	0%
Fragmentation	Non-fragmenting design
Vacuum Service	Withstands full vacuum (14.7 psi) without separate vacuum support
Fluid compatibility	Gas service and liquid service
Torque requirements	Non torque-sensitive
Cycling or static service	Suitable for high-cycling applications (tested to 1 million cycles)
Relief Valve Isolation	Suitable for safety relief valve isolation
Leak tightness	Helium Leak checked to 1x10^-8 cc-atm/sec
Design Standards	Designed to meet ASME Section XIII standards

Certifications

ASME UD

Related Products

Sensors
AMS
SVT

Holders
LKR
LKR-P

Schematic Drawing

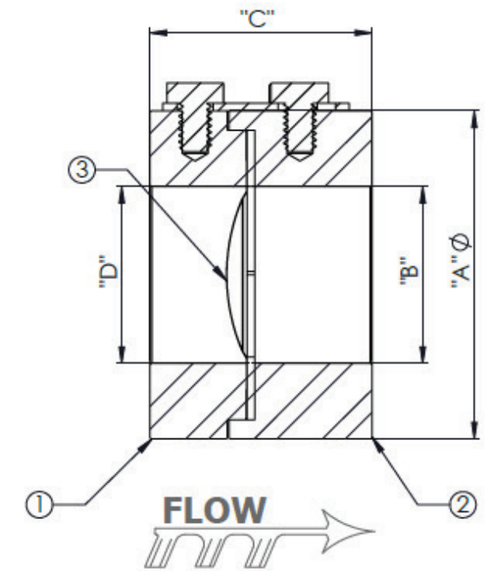

NOMINAL BORE		STANDARD HEIGHT (C)	
inches	DN (mm)	inches	mm
1	25	1.91	48.5
1.5	40	2.00	50.8
2	50	2.25	57.1
3	80	2.50	63.5
4	100	3.25	82.55
6	150	4.00	101.6
8	200	4.25	107.9
10	250	5.25	133.3
12	300	6.50	165.1

Standard height dimensions account for the disc and holder assembly only. They do not account for gasket thickness.

FLANGE SPECIFICATIONS	
EN 1092-1 PN DESIGNATED	BS EN 1759-1 ANSI DESIGNATED
PN 6	ANSI 150
PN 10	ANSI 300
PN 16	ANSI 600
PN 20	ANSI 900
PN 25	ANSI 1500
PN 50	ANSI 2500
PN 63	
PN 100	

Burst Pressure Ranges

LoKr Min/Max Burst Pressure @ 72° F (psig) / 22° C (barg)

SIZE (inches)	SIZE DN (mm)	MATERIAL	MIN psig (barg)	MAX psig (barg)
1	25	316 Stainless Steel Nickel Inconel Monel Hastelloy C	15 (1.03)	2000 (137.9) 1750 (120.66) 2000 (137.9) 2000 (137.9) 2500 (172.3)
1.5	40	316 Stainless Steel Nickel Inconel Monel Hastelloy C	10 (0.69)	1500 (103.42) 1000 (68.95) 1500 (103.42) 1300 (89.63) 2200 (151.68)
2	50	316 Stainless Steel Nickel Inconel Monel Hastelloy C	10 (0.69)	1200 (82.74) 1000 (68.95) 1500 (103.42) 1200 (82.74) 2200 (151.68)
3	80	316 Stainless Steel Nickel Inconel Monel Hastelloy C	10 (0.69)	1200 (82.74) 1000 (68.95) 1500 (103.42) 1200 (82.74) 2000 (137.9)
4	100	316 Stainless Steel Nickel Inconel Monel Hastelloy C	10 (0.69)	1200 (82.74) 1000 (68.95) 1500 (103.42) 1200 (82.74) 1500 (103.42)
6	150	316 Stainless Steel Nickel Inconel Monel Hastelloy C	10 (0.69)	750 (51.7) 600 (41.37) 750 (51.7) 750 (51.7) 750 (51.7)
8	200	316 Stainless Steel Nickel Inconel Monel Hastelloy C	10 (0.69)	600 (41.37) 500 (34.47) 600 (41.37) 600 (41.37) 750 (51.7)
10	250	316 Stainless Steel Nickel Inconel Monel Hastelloy C	10 (0.69)	400 (27.58) 250 (17.24) 400 (27.58) 400 (27.58) 500 (34.47)
12	300	316 Stainless Steel Nickel Inconel Monel Hastelloy C	10 (0.69)	300 (20.6)

Free Flow Area / Minimum Net Flow Area (MNFA)

NOMINAL BORE inches	NOMINAL BORE DN (mm)	MNFA Sq. Inch	MNFA mm^2
1	25	0.864	557
1.5	40	2.036	1,313
2	50	3.355	2,164
3	80	7.393	4,769
4	100	12.73	8,212
6	150	28.89	18,638
8	200	50.0	32,258
10	250	78.9	50,903
12	300	111.9	72,193

Burst Tolerance

+/-5% > 40 psig +/-5% > 2.8 barg	+/-2 psig ≤ 40 psig +/-0.14 barg ≤ 2.8 barg

K_R **Value** (Frictional Loss Factor)

K_R	LoKr
K_{RGL}	0.22

Download full technical specifications

OsecoElfab

Our Products and Services Provide Complete Peace of Mind

PRODUCT OVERVIEW

Oseco Safety Cartridge™

Single piece unit eliminates multiple leak paths

Ultra High Pressure Scored Reverse Buckling Disc Assembly

HPSR: *Single piece unit designed for a burst pressure over 6,000 psig*

High Performance Reverse Buckling Discs

LoKr: *Industry-leading K_R value*

OPR+/OPK+: *Non-invasive burst detection system*

High Performance Forward Acting Scored Disc

FAS™: *Lowest K_R value available for forward acting discs*

Composite Rupture Disc

Standard Rupture Disc

Explosion Protection

Burst Detection Sensors

SERVICES

Engineering and Maintenance Training Seminars

Safety Surveys

Custom Engineered Solutions

Expedited Shipments

Emergency Response Team

24/7/365 Customer Service

Let us help you with all your pressure relief questions.

US office | *Broken Arrow*
+1 (918) 258 5626 | info@osecoelfab.com

UK office | *North Shields*
+44 (0)191 293 1234 | uksales@osecoelfab.com

osecoelfab.com