ATONARP

ASTON™

THE ADVANCED MOLECULAR SENSOR FOR SEMICONDUCTOR METROLOGY

INTRODUCING A MAJOR EVOLUTION IN METROLOGY FOR SEMICONDUCTOR PROCESS CONTROL AND OPTIMIZATION.

Atonarp Aston™ is a robust compact mass spectrometer, designed from the ground up to be the workhorse metrology tool for gas monitoring and control in semiconductor manufacturing. High quantitative accuracy and real-time performance are combined with production-ready robustness and dependability, helping to increase process chamber throughput and maximize yields of high-precision, multi-layer material deposition and etch processes in production environments.

REAL-TIME IN-SITU METROLOGY

Aston's in-situ data is rich, quantified, specific, and actionable real-time molecular data, offering significant advantages to in-line data taken after processing. In-situ data allows tighter up-to-the-minute process control to provide greater statistical process control (SPC) margin throughput and line yield.

ACTIONABLE DATA

Aston helps to identify and mobilize the fundamental changes needed to optimize FAB management. In the switch from in-line to in-situ metrology solutions, data must be immediately actionable to provide tight control loops on process equipment. It's less about 'big data' and more about 'useful data' - that's where Aston delivers.

AUTONOMOUS AND CONNECTED

Connect from anywhere in the enterprise to securely control Aston and access molecular data through the AtonLab cloud-based software or via the high-speed software API to integrate into existing applications.

ONE TOOL, MANY SOLUTIONS

One tool supports the broadest class of semiconductor metrology needs:

- Chamber Management
- Machine Learning & Artificial Intelligence
- Small Open Area & High Aspect Ratio Etch
- Technology Transfer
- Chemical Vapor Deposition & Metal Etch
- Selective Processing (ALD & ALE: Atomic Level Etch & Deposition)
- Abatement and Pump Management
- EUV lithography and Mask-Making

The Aston Difference: A Total Chamber Solution

Aston™ is a total chamber solution, with the versatility to offer real time in-situ monitoring of precursors, reactants, and byproducts during various process steps. Aston represents a major evolution in metrology for semiconductor gas analysis by addressing the challenges of sensor durability and ease of use.

Today's process control requires increasingly precise in-situ process management. Atomic-level tolerances of a few angstroms (10^{-10} meters) are increasingly common. A silicon atom size is ~2Å, critical tunneling barriers and oxide layers in advance semiconductor logic and memories made from Silicon Oxide (SiO_2) or Silicon Nitride (Si_3N_4) may be less than 100 molecules thick.

Controlling the deposition and etch of these layers has faced growing metrology complexity. 3D-NAND Flash memories, emerging embedded memories like MRAM and RRAM, and even simple logic devices now require 3D structures using atomic processes such as Atomic Level Etch (ALE), using Reactive Ion Etch (RIE), and Atomic Level Deposition (ALD).

ASTON ADVANTAGES

- Corrosive Gas Resistant
- Condensate Resistant
- Real-Time, Actionable Data
- Cloud Connectivity-Ready
- No Plasma Required

BEST-IN-CLASS FEATURES

- Stability
- Repeatability
- Sensor Lifetime
- Mass Range
- Resolution
- Min Detectible Partial Pressure
- Sensitivity (ppb)
- Sample Rate

APPLICATIONS SUPPORTED

- Dielectric Etch
- Metal Etch EPD
- CVD Monitoring and EPD
- Chamber Clean EPD
- Chamber Fingerprinting
- Chamber Matching
- High Aspect Ratio Etch
- Small Open Area <0.3% Etch
- Atomic Level Deposition & Etch

Aston vs. Alternative Solutions

	Dielectric Etch Endpoint	HAR Dielectric Etch Endpoint	Metal Etch Endpoint	CVD Endpoint	Chamber Fingerprint & Matching	
Aston	✓	✓	✓	✓	✓	• **Purpose-built for semi applications**
OES	✓	X	X	X	X	• Lacks sensitivity & quantification
RGA	✓	X	X	X	X	• Limited hours of operation • Low sensitivity • Not designed for process control

A New Standard In Mass Spectrometry for Metrology

Mass spectrometry is the gold standard for quantitative molecular chemical analysis, however conventional mass spectrometers use filament-based ionizers to generate charge ions and are not suited for semiconductor applications. The reactivity of the filament-based ionizer with corrosive fluorine-based etch gases like CF_4, SF_6, CHF_3, C_4F_8, and chlorine-based gases Cl_2, BCl_3, CCl_4, severely limit the filament's lifetime. Additionally, deposition of particles and vapor contaminants (during PVD) can also affect the sensor performance. Filament-based electron impact ionizers are therefore impractical on a production tool intended for high volume manufacturing.

Unlike legacy mass spectrometers, Aston offers a plasma ionization source which enables it to survive in corrosive gas environments for up to 100x longer.

Aston enables a critical paradigm shift in the way process is controlled; moving from crude time-based control to precise measurement-based, real-time, reliable, and accurate control, even in harsh chemical environments. Having metrology information is critical to controlling low contact density (< 0.5%), open area, and high aspect ratio (HAR) features (> 50:1) prevalent in the 3D process structures that are increasingly demanded. Figure 1 illustrates a typical deposition-intensive 3D NAND process cycle where Silicon oxide and Nitride layers are alternated at high speed, followed by chamber clean following each wafer. In this case, Aston can precisely detect the endpoint in both the oxide-nitride transition and chamber clean, saving processing time relative to time-based or less precise OES metrology.

FIGURE 1

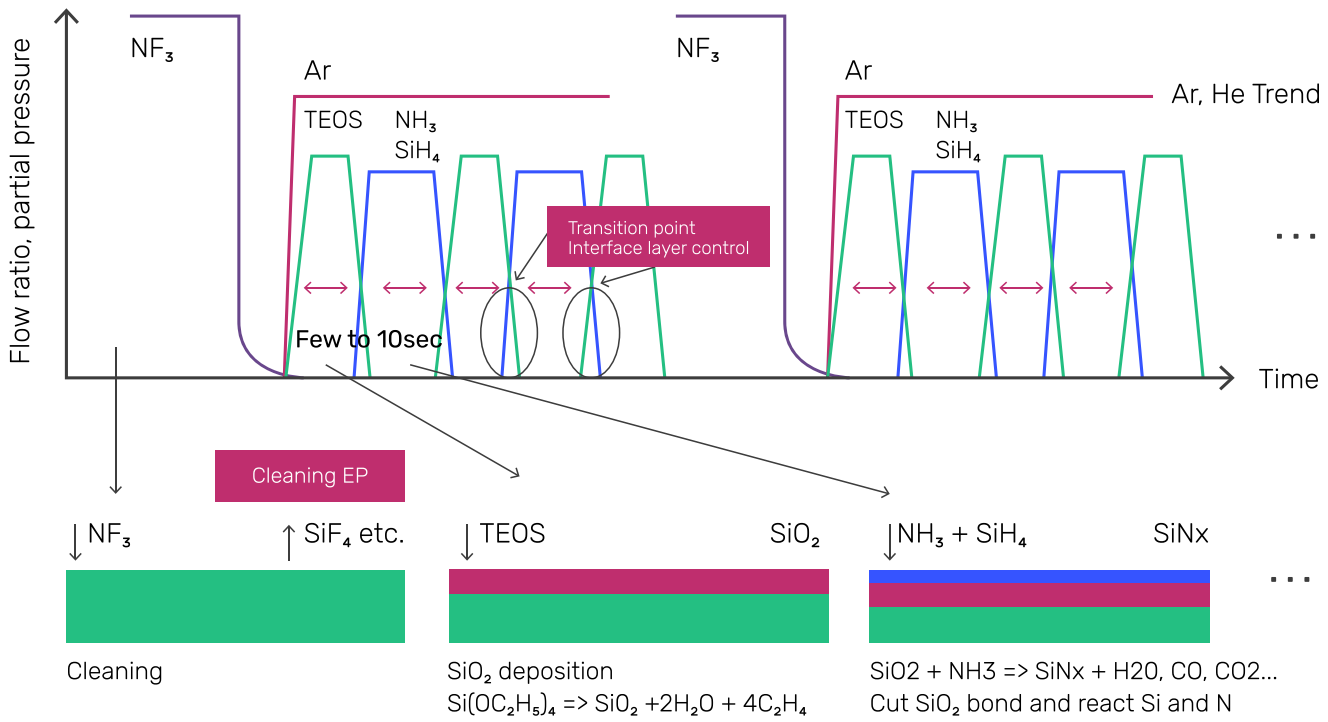

KEY FEATURES

Aston: Designed for Superior Performance

Embedded into the architecture of Aston are patented technologies enabling superior analytical and operational performance. Great emphasis is placed on low maintenance, long-term signal stability, and repeatability to enable the stringent requirements for *CopyExactly!* process control. This also supports matching of tools across production corridors within a fab, as well as enterprise-wide for similar processes across different fab locations.

MICROPLASMA IONIZER & SELF-CLEANING

To withstand the harsh environment of etch and deposition processes, Aston introduces two unique patented features to a semiconductor mass spectrometry solution: MicroPlasma ionization and ReGen self-cleaning mode.

Aston eliminates the ionizing filament and replaces it with MicroPlasma ionization, removing the problems of filament degradation due to filament reactivity with corrosive process gases (e.g. NF_3, CF_4, Cl_2). The ReGen mode enables the instrument to clean itself, using energetic plasma ions to remove deposits on the sensor and Aston chamber walls that can build up during CVD. Aston sensitivity is therefore maintained across 1,000+ RF hours of operation. ReGen mode can be synchronized with regular tool preventive maintenance events. Aston's MicroPlasma ionization, combined with ReGen for the removal of particles such as tetraethyl orthosilicate (TEOS) and vapor contaminant deposits, gives Aston a lifetime of operation comparable with other production semiconductor tools.

AVC SAMPLER (OPTIONAL)

Process gases are efficiently sampled by the Aston via a fast response pressure controller module: Automatic Vacuum Controller (AVC). The intelligent sampler ensures a constant small inlet flow even if the process chamber experiences pressure excursions.

The pressure in both the Plasma and HyperQuad (quadrupole) sensor chambers is maintained at a constant level using a commercial dual inlet turbomolecular pump.

HYPERQUAD SENSOR

Molecules ionized in the MicroPlasma ionizer are efficiently transported to the sensor for analysis using a network of electrostatic lenses. The HyperQuad sensor is also outfitted with a conventional electron impact ionizer intended for operation at baseline pressures and calibration. The analytical stage of the HyperQuad sensor is a quadrupole using micrometre-level accurate hyperbolic electrodes. Driven by a highly linear RF (Radio Frequency) circuitry and utilizing a dual Faraday/SEM (secondary electron multiplier) detector, Aston's HyperQuad sensor produces high analytical performance (down to parts per billion level) over a mass range of up to 350 amu (see specifications table below).

KEY FEATURES

Software, Tool Integration & Communications

AtonLab is the primary graphical user interface (GUI) for control, data acquisition, analysis, and quantification. The web-based GUI offers a unique IP address for each control interface and Aston device. Atonarp also has a published web service application programming interface [API] to allow the user to directly control and acquire data from each Aston. High-speed communications with the device are established using ethernet and/or RS232 ports built into the controller module. Protocol interface options include ethercat, Modbus, and CLI (Command Line Interface).

Aston is interfaced to the process tool via a peripheral module featuring a network of digital and analog inputs and outputs (ADIOs). Process parameter collection is accomplished over ethercat to enable correlating chemistry data with the production run data (e.g., wafer ID and time stamp), as well as providing advanced alarm capabilities that protect the process from "out of specification" process events.

FIGURE 2 - ASTON INTERIOR COMPONENTS

ASTON SPECIFICATIONS

PARAMETER	CONDITION	MIN	TYPICAL	MAX	UNITS
Mass Range		2		350	u
Mass Resolution	Full Width at 10% Valley for N_2	0.6	0.8	1	u
Mass Number Stability		0.1	0.1	0.3	u
Sensitivity (FC/SEM)	Nitrogen-equivalent		$5x10^{-6}/5x10^{-4}$		A/Torr
Minimum Detectable Partial Pressure (FC/SEM)	Nitrogen-equivalent		$10^{-9}/10^{-11}$		Torr
Limit of Detection	Nitrogen-equivalent		10		ppb
Maximum Operating Pressure			10^{-3}		Torr
Dwell Time per u		1	40	200	ms
Scan Update Rate per u			37		ms
Sampling Pressure Range		$1x10^{-5}$		$1x10^{-3}$	Torr
Operating Temperature	80% relative humidity non-condensing	5		35	°C
Emission Current		0.1	0.4	1	mA
Emission Current Accuracy		0.03	0.05	0.1	%
Start-up Time			5		mins
Ion Current Stability	Over 24 hrs at constant ambient & pressure		< +/-1		%
Concentration Accuracy			< 1		%
Concentration Stability		±0.5	±0.5	±1	%
Power Consumption	24VDC		350		W
Weight			13.7		Kg
Size	Length x Width x Height		400 x 297 x 341		mm

ATONARP

ASTON™

ATONARP.COM