www.GOODWAYCNC.com

GTZ-2000 SERIES

Multi-tasking Turning Centers

THE ULTIMATE MACHINING POWER

GOODWAY®

Brand New Multi-Tasking Machining Technology

- New twin spindle and twin turret combination
- Upper and lower turret can be adjusted based on different machining requirements
- Production capacity is 1.5 times larger than average models

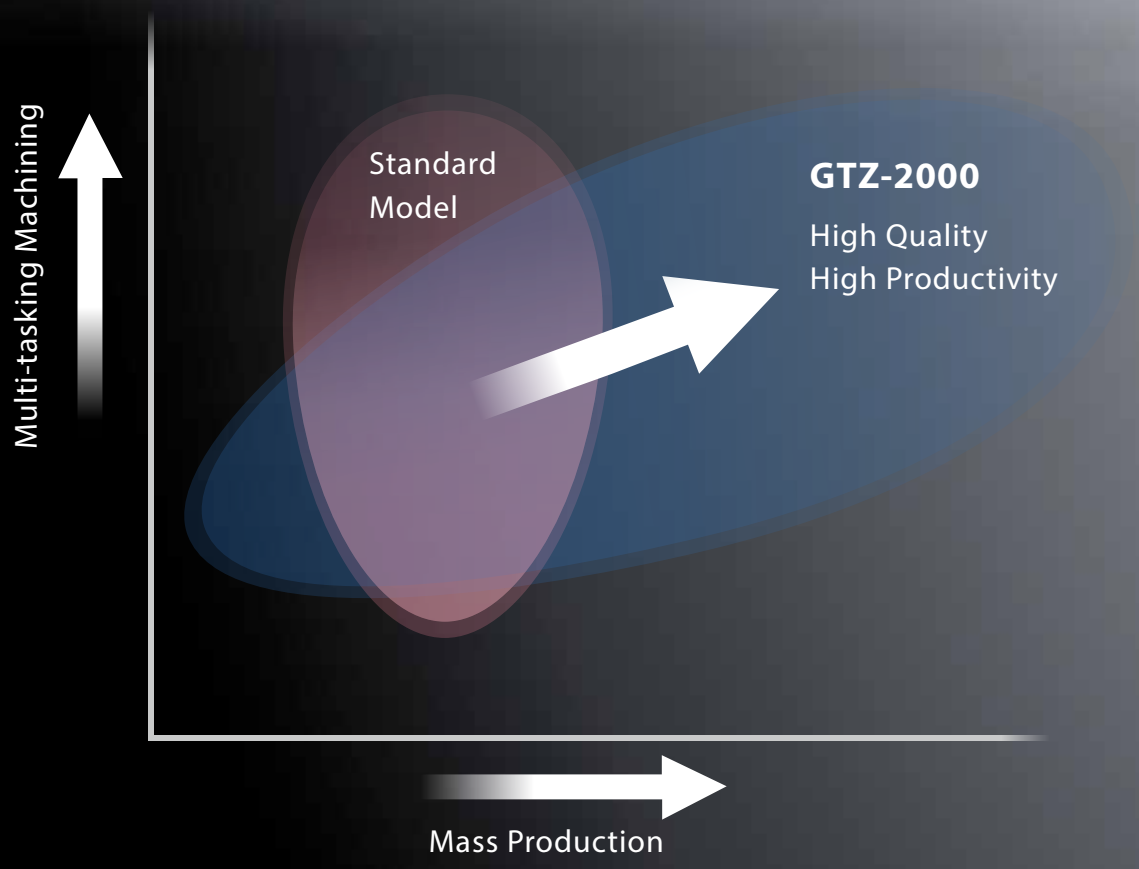

GLINC 350
MACHINE READY
EDIT KEY

▶ Upper turret working on left spindle
Lower turret working on right spindle

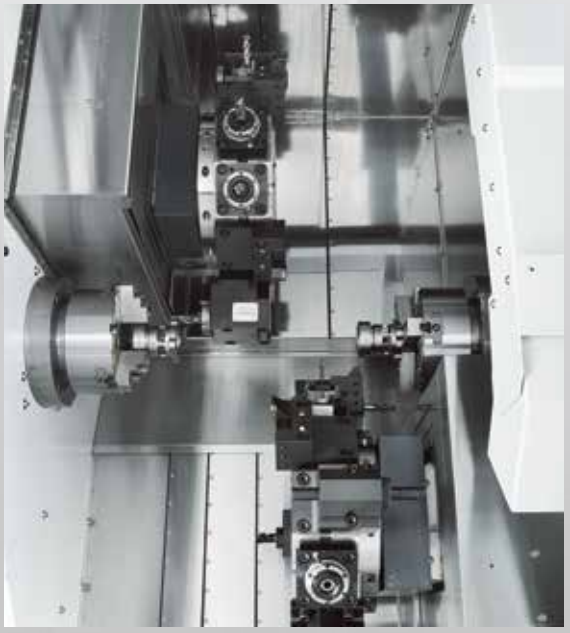

▶ Upper turret working on right spindle
Lower turret working on left spindle

Flexible Machining Combinations

Work-piece can be moved between both spindles

Both turrets can work on the work-piece simultaneously

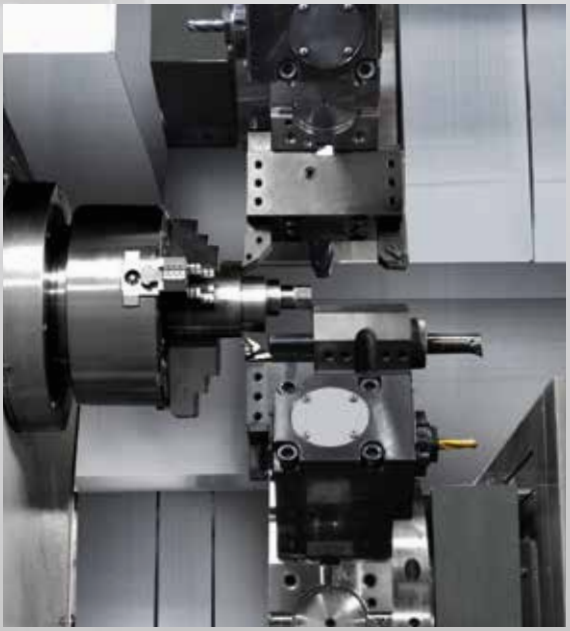

High Rigidity Structure

The low center of gravity 45° slant bed design provide a super rigid foundation for the headstock and turret.

By using Finite Element Methods (FEM), optimal reinforced ribbings are directly cast into the one-piece bed structure.

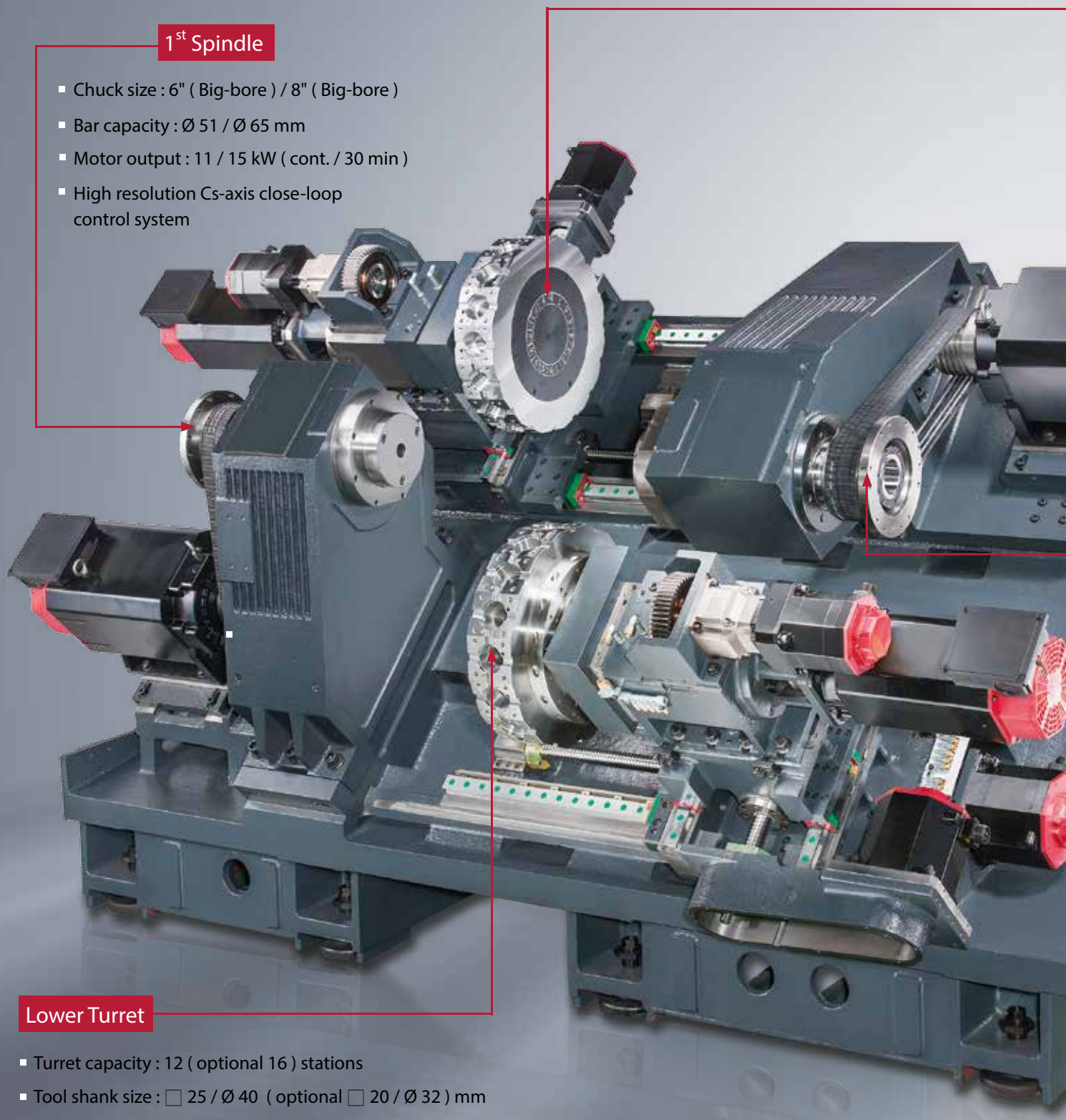

1st Spindle

- Chuck size : 6" (Big-bore) / 8" (Big-bore)
- Bar capacity : Ø 51 / Ø 65 mm
- Motor output : 11 / 15 kW (cont. / 30 min)
- High resolution Cs-axis close-loop control system

Lower Turret

- Turret capacity : 12 (optional 16) stations
- Tool shank size : □ 25 / Ø 40 (optional □ 20 / Ø 32) mm
- Live tooling shank size : ER32 (optional ER25)
- Live tooling output : 3.7 / 5.5 kW (cont. / 30 min)
- Flexible turret combination can support twin spindle machining

Upper Turret

- Turret capacity : 12 (optional 16) stations
- Tool shank size : □ 25 / Ø 40 (optional □ 20 / Ø 32) mm
- Live tooling shank size : ER32 (optional ER25)
- Live tooling output : 3.7 / 5.5 kW (cont. / 30 min)
- Flexible turret combination can support twin spindle machining

2nd Spindle

- Chuck size : 6" (Big-bore) / 8" (Big-bore)
- Bar capacity : Ø 51 / Ø 65 mm
- Motor output : 11 / 15 kW (cont. / 30 min)
- High resolution Cs-axis close-loop control system

With the optional 16-station turret, maximum tool station capacity is up to 32 tools, which can easily fulfill various machining requirements.

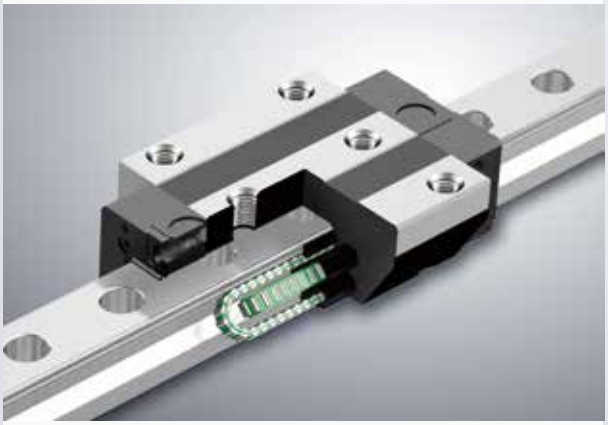

Roller type linear guide way provides rigidity for heavy cutting and speed for fast turning advantages.

The optional high resolution close-loop linear scale ensure optimal positioning and repeatability accuracy.

Dimensions

12-Stations Turret (For GTZ-2000)

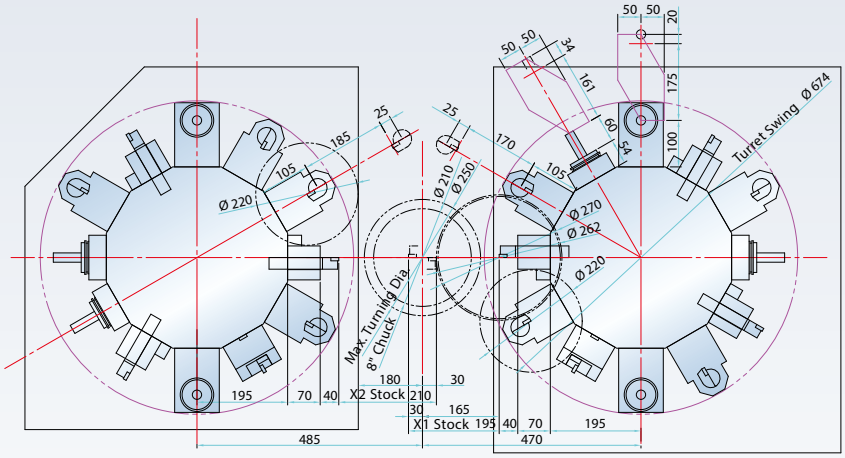

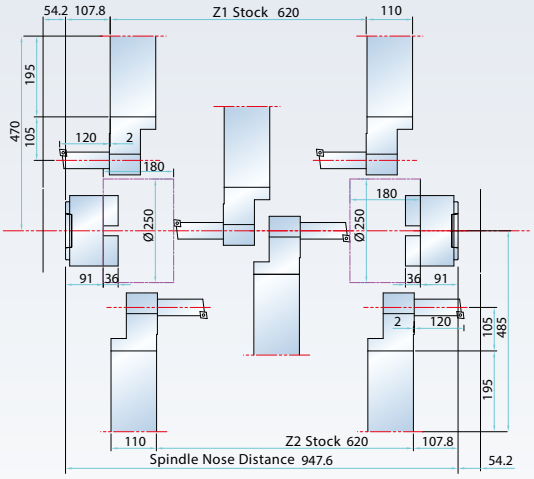

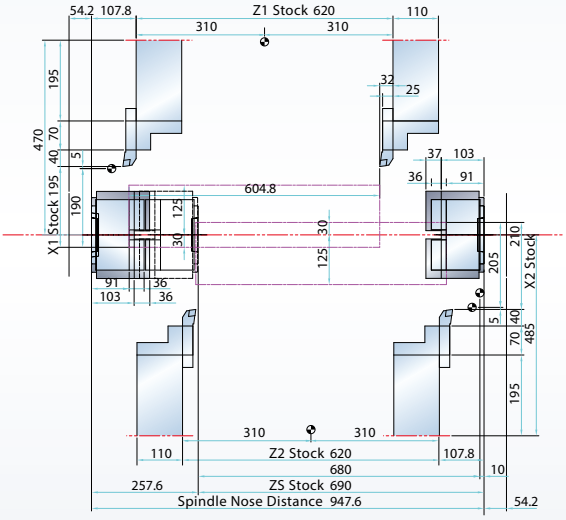

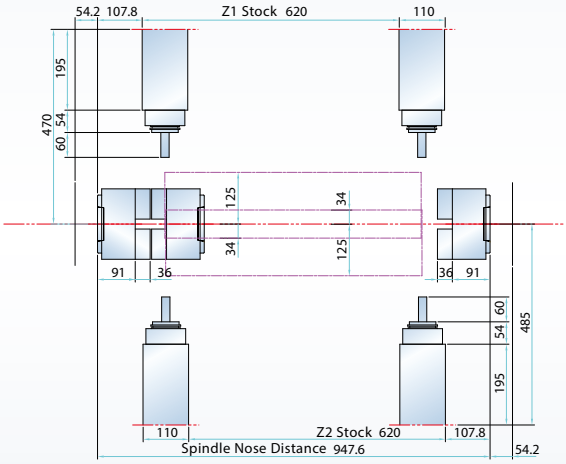

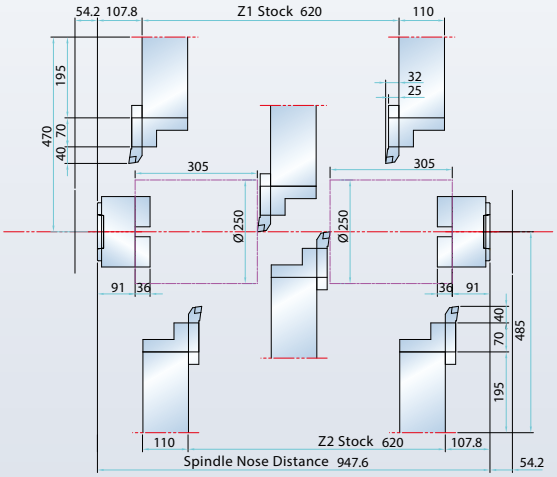

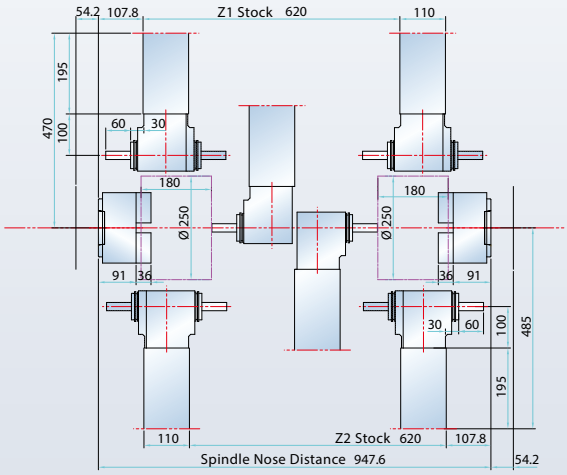

(Unit : mm)

Optional 16-Stations Turret (For GTZ-2000)

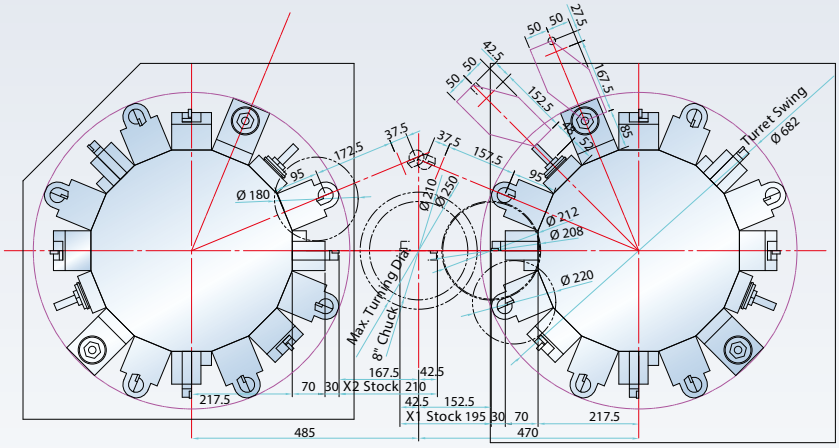

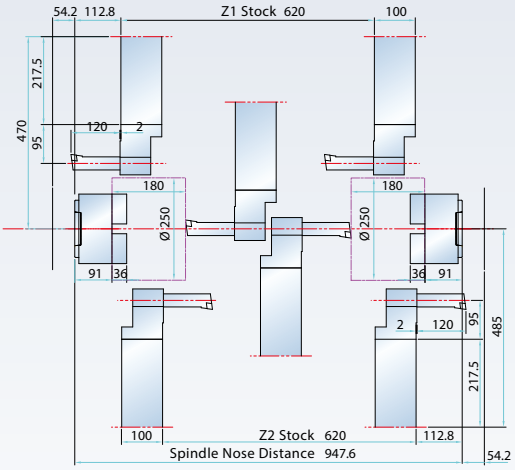

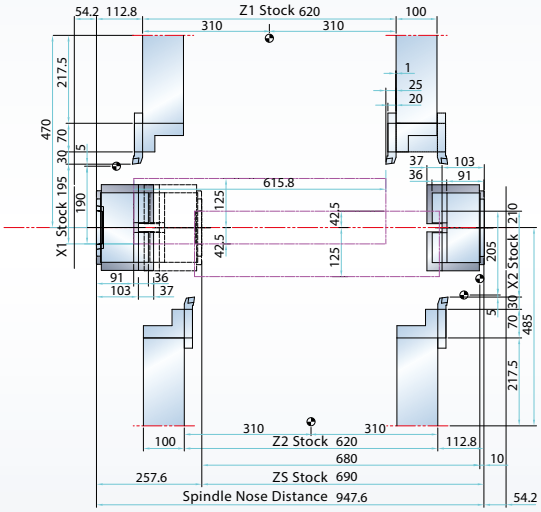

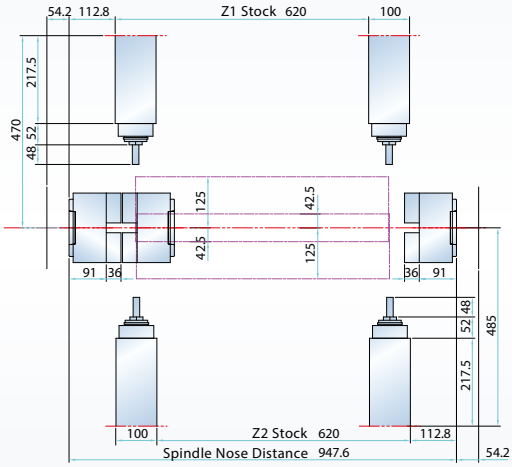

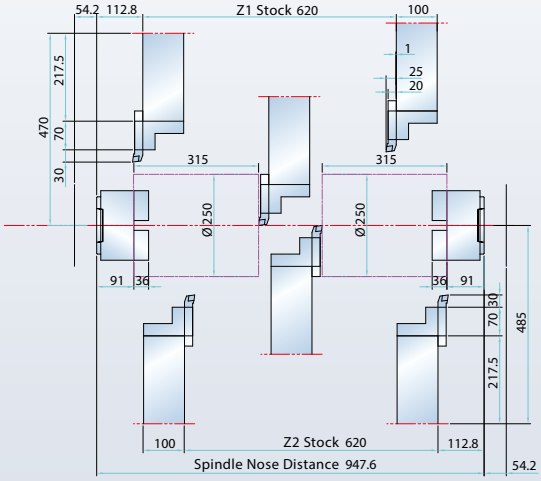

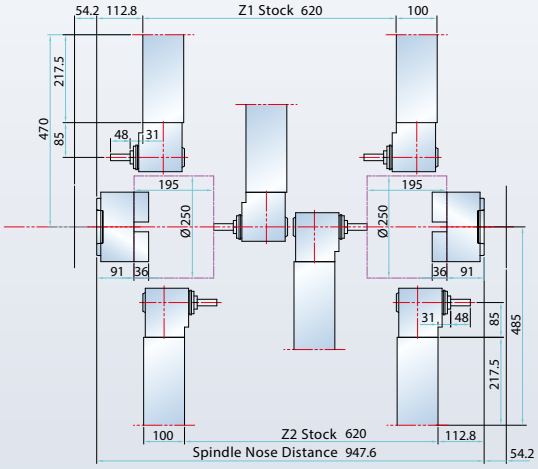

(Unit : mm)

MACHINE SPECIFICATIONS

CAPACITY	GTZ-2000	GTZ-2600
Max. swing diameter	Ø 270 mm	
Max. turning diameter	Ø 250 mm	
Max. turning length	604.8 / 615.8*1 mm	592.8 / 603.8*1 mm
Chuck size	6" (Big-bore)	8" (Big-bore)
Bar capacity	Ø 51 mm	Ø 65 mm
SPINDLE		
Hole through draw tube	Ø 52 mm	Ø 65.5 mm
Hole through spindle	Ø 66 mm	Ø 76 mm
Spindle bearing diameter	Ø 100 mm	Ø 120 mm
Hydraulic cylinder	6"	8"
Spindle nose	A2-5	A2-6
Spindle motor type	FANUC αP22 / 6000i (AC / Wide- Range)	
Motor output (Cont.)	11 kW	
Motor output (30 min.)	15 kW	
Motor full output speed	750 rpm	
Spindle drive system	Direct Belt Drive	
Spindle drive ratio	4 : 5	2 : 3
Spindle speed range	48 ~ 4,800 rpm	40 ~ 4,000 rpm
Spindle full output speed	600 rpm	500 rpm
Spindle torque (Cont.)	175 N-m	210 N-m
Spindle torque (30 min.)	239 N-m	287 N-m
C-AXIS (OPTIONAL)		
Drive type	Cs	
C-axis rapids	400 rpm	
X / Z AXES		
Max. X1 / X2 axes travel	195 / 210 mm	
Max. Z1 / Z2 axes travel	620 / 620 mm	
Max. ZS axis travel	690 mm	
X / Z axes rapids	24 m/min	
Slide way type	Linear Guide Way	
Feed rates	1~ 4,800 mm/min	
X / Z axes servo moter	AC 3.0 kW	
X / Z axes thrust	961 kgf	
TURRET		
Station	12 + 12 [16 + 16 (Opt.)]	
Indexing drive	FANUC AC Servo motor	
Indexing speed	0.2 sec. Adjacnt / 0.5 sec. 180˚ degree (Single step)	
Accuracy	Positioning : ± 0.00069° Repeatability : ± 0.00027°	
OD tool shank size	□ 25 mm [□ 20 mm (Opt.)]	
ID tool shank size	Ø 40 mm [Ø 32 mm (Opt.)]	

Specifications are subject to change without notice.

*1 For 16-stations turret

LIVE TOOLING TURRET (OPTIONAL)	GTZ-2000	GTZ-2600
Stations / Live tooling stations	12 + 12 [16 + 16 (Opt.)]	
Indexing drive	FANUC AC Servo motor	
Index speed	0.2 sec. Adjacnt / 0.5 sec. 180˚ degree (Single step)	
Accuracy	Positioning : ± 0.00069° Repeatability : ± 0.00027°	
Live tooling drive motor	AC 3.7 / 5.5 kW	
Live tooling shank size	ER32 (Ø 20 mm) [ER25 (Ø 16 mm) Opt.]	
Live tooling RPM range	6,000 rpm	
Y -AXIS (OPTIONAL)		
Max. Y-axis travel	100 =± 50 mm	
Y-axis rapids	10 m/min	
Slide way type	Linear Guide Way	
Feed rates	1~ 4,800 mm/min	
Y-axis servo motor	AC 1.6 kW	
Y-axis thrust	640 kgf	
UNLOADING SYSTEM (OPTIONAL)		
Max. work-piece diameter	Ø 60 mm	
Max. work-piece length	150 mm	
Max. work-piece weight	3 kg	
GENERAL		
Positioning accuracy	± 0.005 mm	
Repeatability	± 0.003 mm	
CNC control	FANUC O*i* - TD / FANUC 31*i* (Opt.)	
Voltage / Power requirement	AC 200 / 220 + 10 % to -15 % 3 Phase / 60 kVA	
Hydraulic tank capacity	35 L	
Coolant tank capacity	380 L	
Coolant pump	0.7 kW / 5 Bar	
Machine weight	9,000 kg	
Dimensions (L x W x H)	4,445 x 2,555 x 2,360 mm	

Specifications are subject to change without notice.

Machine Layout

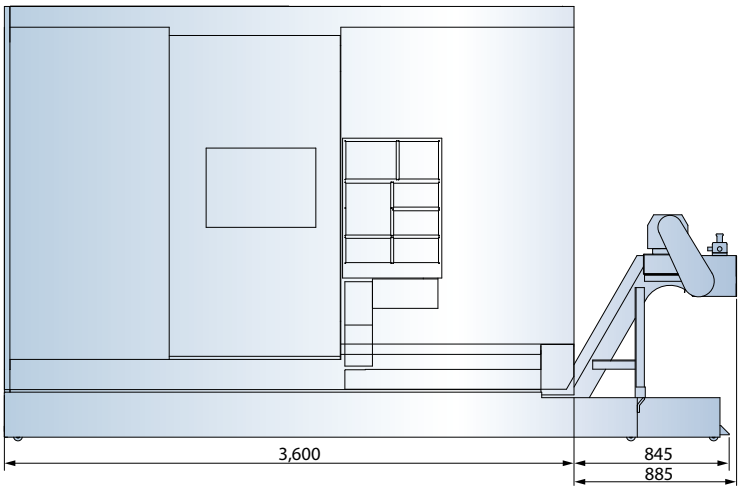

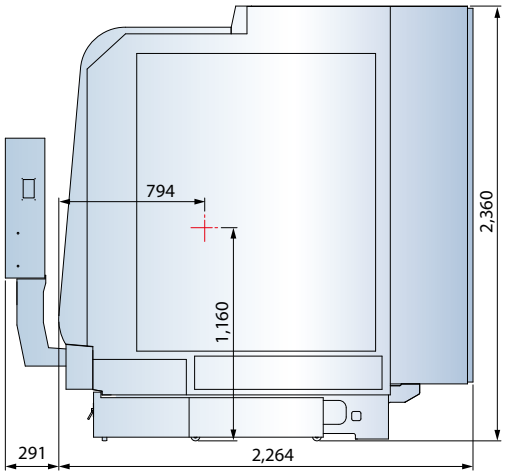

Unit : mm

THE ULTIMATE MACHINING POWER

GOODWAY®

GOODWAYCNC.com

GOODWAY MACHINE CORP.

HEADQUARTERS

No.13, 5Th Road,
Taichung Industrial Park,
Taichung City, 407, Taiwan, R.O.C.
E-mail : goodway@goodwaycnc.com

CENTRAL TAIWAN SCIENCE PARK BRANCH

No. 38, Keyuan Road,
Central Taiwan Science Park.Taichung,
Taichung City, 407, Taiwan, R.O.C.
TEL : + 886-4-2463-6000
FAX : + 886-4-2463-9600

GOODWAY MACHINE (WUJIANG) CO.,LTD

No. 4888, East Lake Taihu Avenue, Wujiang
Economic and Technological Development Zone,
Jiangsu, China
TEL : + 86-512-8286-8680
FAX : + 86-512-8286-8620
E-mail : goodway.wj@goodwaycnc.com

Copyright 2015 by Goodway Machine Corp. All right reserved
G-GTZ-2000-EN-201501