ÅirIQ® By COSASCO®

Intelligent Decision Making

ÅirIQ provides real-time air quality monitoring to indicate a corrosive environment well before damage to critical assets can occur. Our hypersensitive ER technology eliminates uncertainty by measuring the direct effect of airborne contaminants.

Benefits

Detects real-time corrosion rate in critical asset locations

Reduces unplanned maintenance

Helps to maintain a strictly controlled environment

Key Features

- Direct measurement of corrosion with ER technology
- Monitors corrosion rate, temperature, relative humidity, and differential pressure
- Touchscreen interface with LED indicators
- Ethernet, 4-20mA connections
- Copper and Silver sensors measured in accordance to ISA standard 71.04-2013

Applications

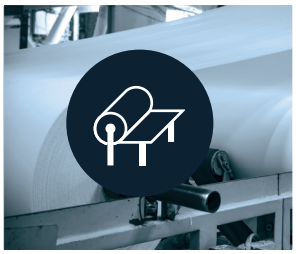

PULP & PAPER

DATA CENTERS

INDUSTRIAL

MUSEUM & ARCHIVES

Questions?

Call +1 (562) 949-0123

email sales@cosasco.com

airiq.cosasco.com

ÅirIQ® By COSASCO®

Specifications

Technical Specs	
Corrosion Severity Level	G1-GX (ISA 71.04-2013)
Sensor Life	5000Å
Relative Humidity Reading	10% to 95% range
Temperature Reading	0°C to +50°C (+32° to +122°F)
Differential Pressure Reading	0 to 0.5 i.w.g.
Local Display	5” color display with 4 LED sensors
Communications	Ethernet, 4-20 mA
Power Supply	<24 Vdc, terminal block connection

Product Dimensions

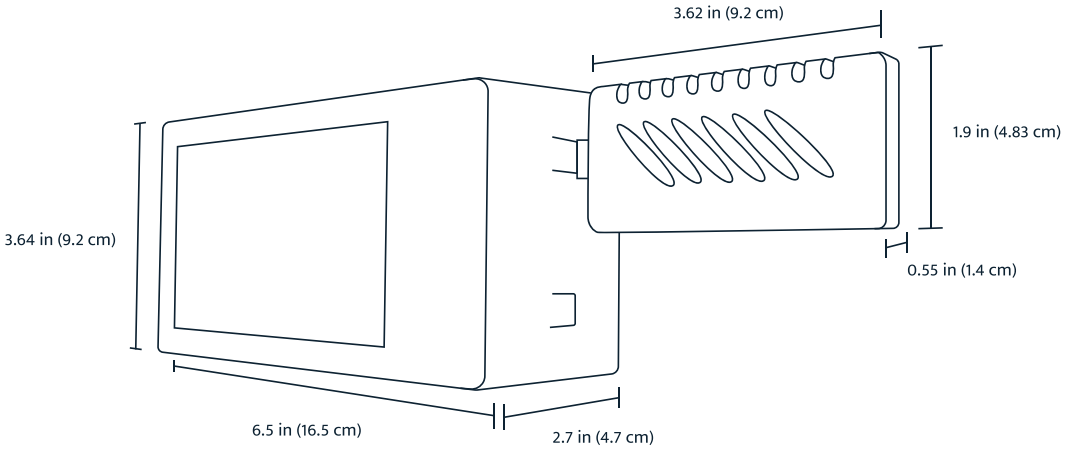

Powered by ER Technology

ÅirIQ operates using ER (electrical resistance) technology. The electrical resistance of hypersensitive coupons (copper and silver sensors) is measured as they corrode in response to the environment. This provides a direct calculation of the corrosion rate due to airborne contaminants. Also, as the ER technology is independent of material frequency, the ÅirIQ can be moved to various locations.

Questions?

Call +1 (562) 949-0123

email sales@cosasco.com

airiq.cosasco.com

COSASCO®
A Halma company

CE RoHS COMPLIANT