Board-Con Male Connector 180°, 2.00 x 2.00mm, 2 - 80 Position, 2 rows, 1 housing, housing height 2.50mm

PANCON CONNECTORS

NOTES:
Current Rating: 2,00 Amp
Contact Resistance: 20mΩ max.
Withstand Voltage: 500V AC/DC
Insulation Resistance: 1000MΩ min.
Operation Temperature: -40°C to +105°C

Contact Material: Copper Alloy

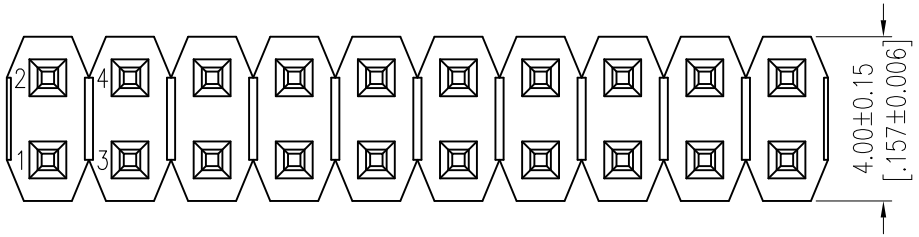

Recommended P.C.B Layout (Top Side)
(PCB BOARD TOLERANCE±0.05)

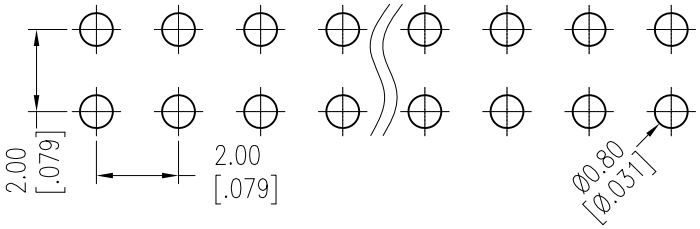

OPERATION	
X.X	±0.40
X.XX	±0.25
X.XXX	±0.15
Angle	± 3°
DIM	TOL

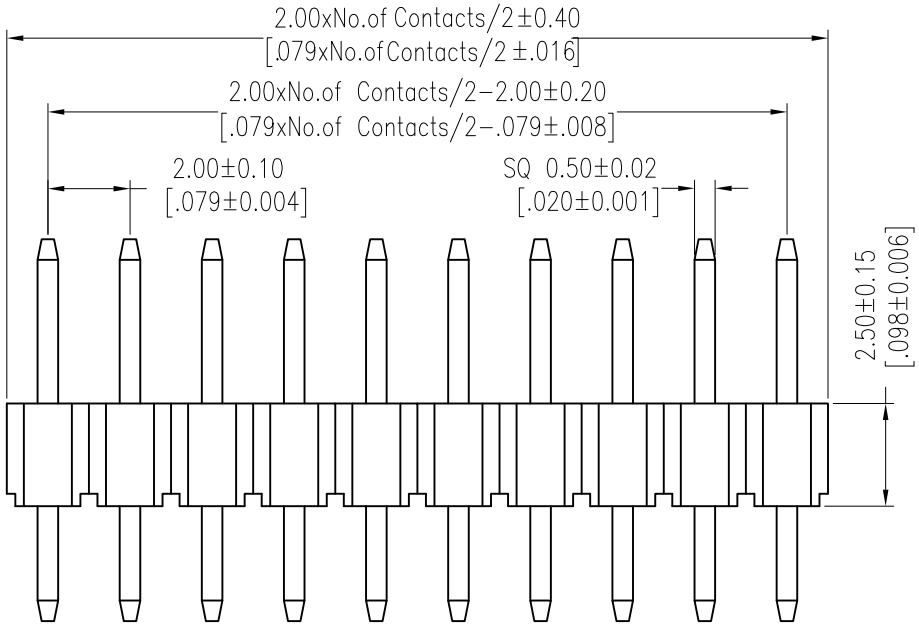

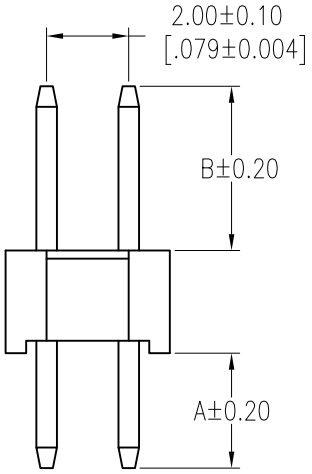

B0409-XXXXX

# of Contacts	Type	Plating	Material	Packaging
2 – 80		Gold Flash 10µ" Gold 15µ" Gold 30µ" Gold Gold Flash/Tin 10µ" Gold/Tin 15µ" Gold/Tin 30µ" Gold/Tin Tin Matte Tin	PA9T	PE Bag

Dimensions		
	Standard	Customized
A:	2,80mm	
B:	3,00mm	

REV	DATE	NOTE	NAME
1	06.06.2021	issued	MCS

Pancon GmbH, Siemensstrasse 7, 61267 Neu-Anspach
Tel: +496081-964-0, www.pancon.de