Board-Con Female Connector SMT 180°, 2.54 x 2.54mm, 4 - 80 Position, 2 rows, 1 housing, housing height 7.10mm, Housing width: 5.5

PANCON CONNECTORS

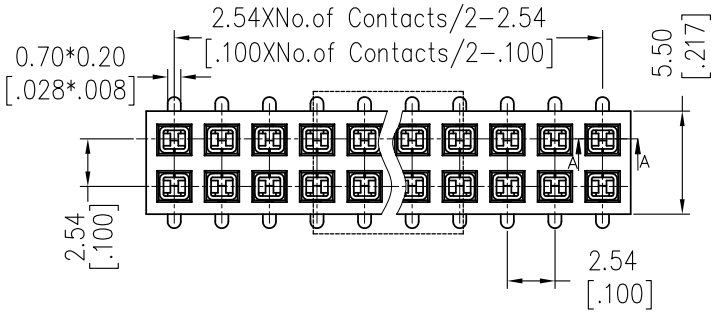

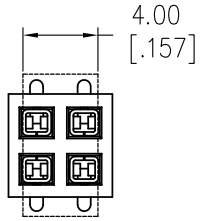

CAP for 2*2P−2*3P

Recommended P.C.B Layout(Top Side)
(PCB BOARD TOLERANCE±0.05)

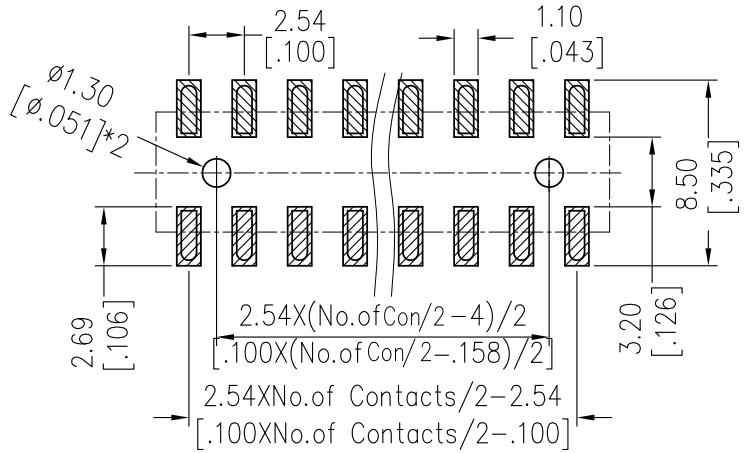

NOTES:
Current Rating: 3,00 Amp
Contact Resistance: 20mΩ max.
Withstand Voltage: 1000V AC/DC
Insulation Resistance: 1000MΩ min.
Operation Temperature: -40°C to +105°C

Contact Material: Copper Alloy

OPERATION	
X.X	±0.40
X.XX	±0.25
X.XXX	±0.15
Angle	± 3°
DIM	TOL

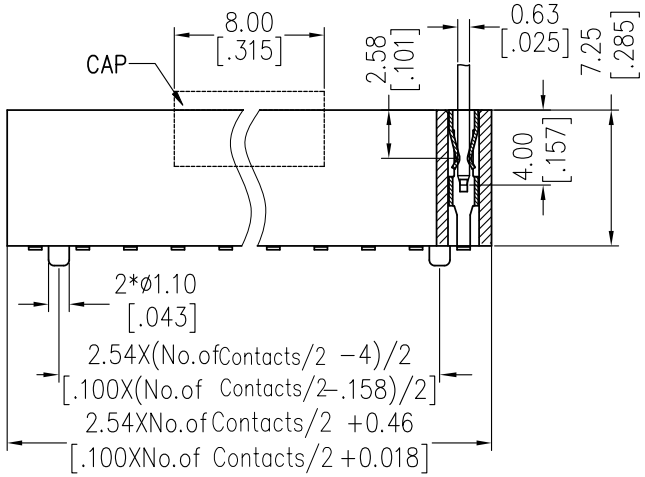

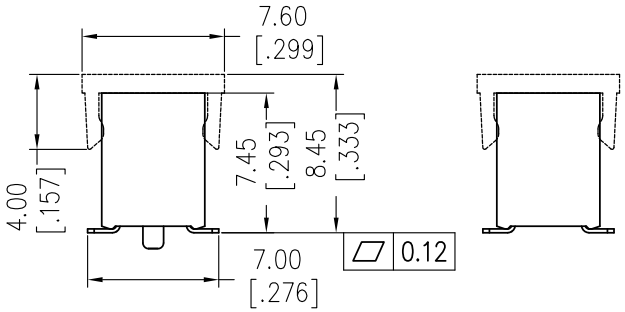

TYPE 2 WITH POST

TYPE 1 W/O POST

B0216-XXXXX

# of Contacts	Type	Plating	Material	Packaging
4 – 80	1	Gold Flash	PA9T	Tube+CAP
	2	10µ" Gold		Tube
		15µ" Gold		T&R+CAP
		30µ" Gold		
		Gold Flash/Tin		
		10µ" Gold/Tin		
		15µ" Gold/Tin		
		30µ" Gold/Tin		
		Tin		
		Matte Tin		

REV	DATE	NOTE	NAME
1	06.06.2021	issued	NIL

Pancon GmbH, Siemensstrasse 7, 61267 Neu-Anspach
Tel: +496081-964-0, www.pancon.de