Board-Con Female Connector SMT 180°, 2.54mm, 2 - 40 Position, 1 row, 1 housing, housing height 5.00mm

PANCON CONNECTORS

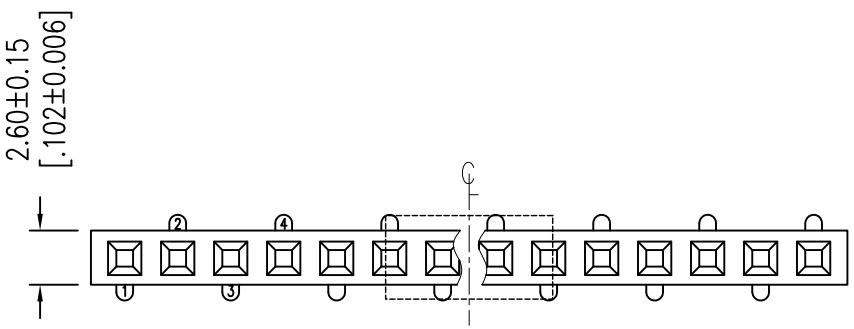

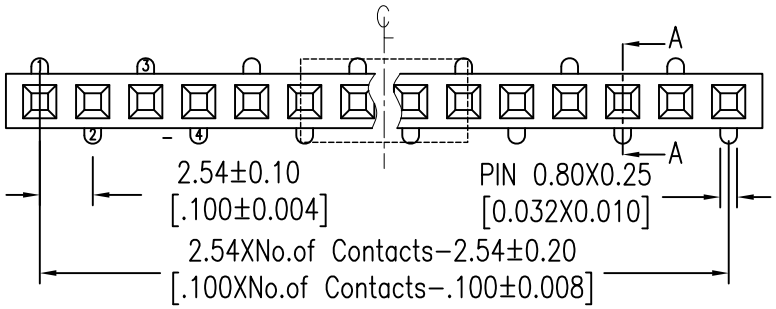

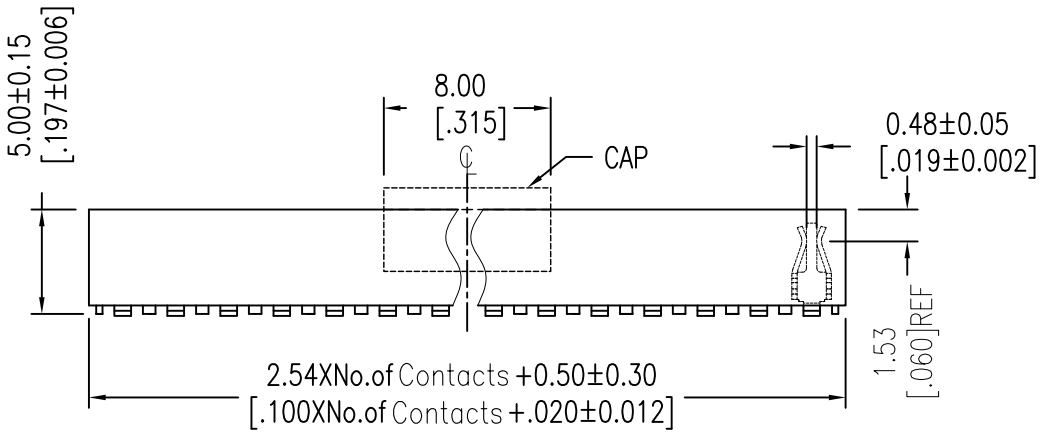

Recommended P.C.B Layout(Top Side)
(PCB BOARD TOLERANCE±0.05)

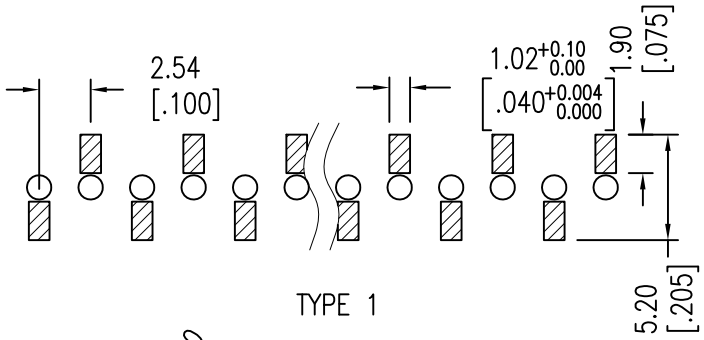

TYPE 1

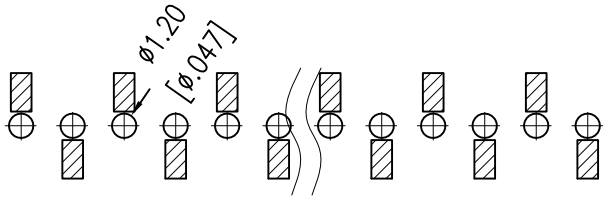

TYPE 2

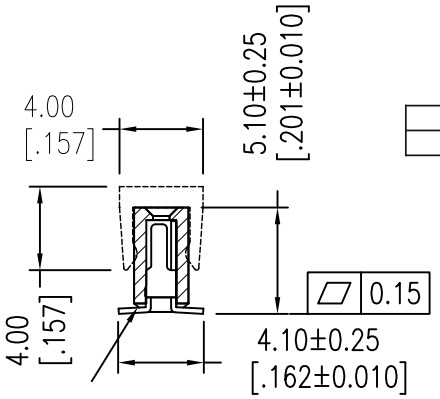

SECTION:A−A

NOTES:
Current Rating: 3,00 Amp
Contact Resistance: 20mΩ max.
Withstand Voltage: 1000V AC/DC
Insulation Resistance: 1000MΩ min.
Operation Temperature: -40°C to +105°C

Contact Material: Copper Alloy

OPERATION	
X.X	±0.40
X.XX	±0.25
X.XXX	±0.15
Angle	± 3°
DIM	TOL

B0162-XXXXX

# of Contacts	Type	Plating	Material	Packaging
2 – 40	1	Gold Flash	PA9T	Tube+CAP
	2	10µ" Gold		Tube
		15µ" Gold		T&R+CAP
		30µ" Gold		
		Gold Flash/Tin		
		10µ" Gold/Tin		
		15µ" Gold/Tin		
		30µ" Gold/Tin		
		Tin		
		Matte Tin		

REV	DATE	NOTE	NAME
1	02.06.2021	issued	NIL

Pancon GmbH, Siemensstrasse 7, 61267 Neu-Anspach
Tel: +496081-964-0, www.pancon.de