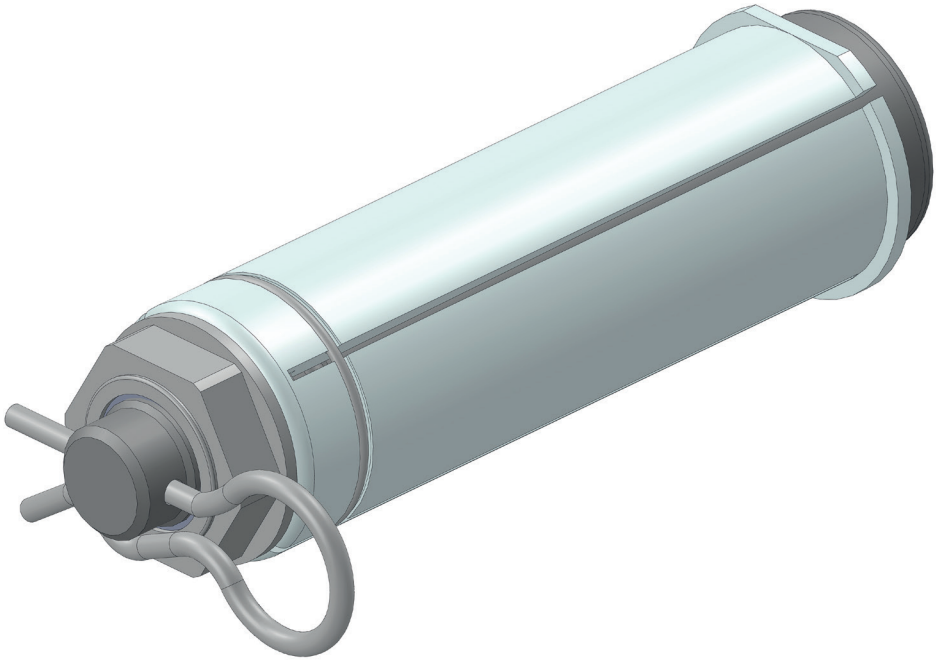

bondura® 2.0

assembly & inspection manual

bondura®

art. 108853 rev. 13.01.2020 A

TABLE OF CONTENT

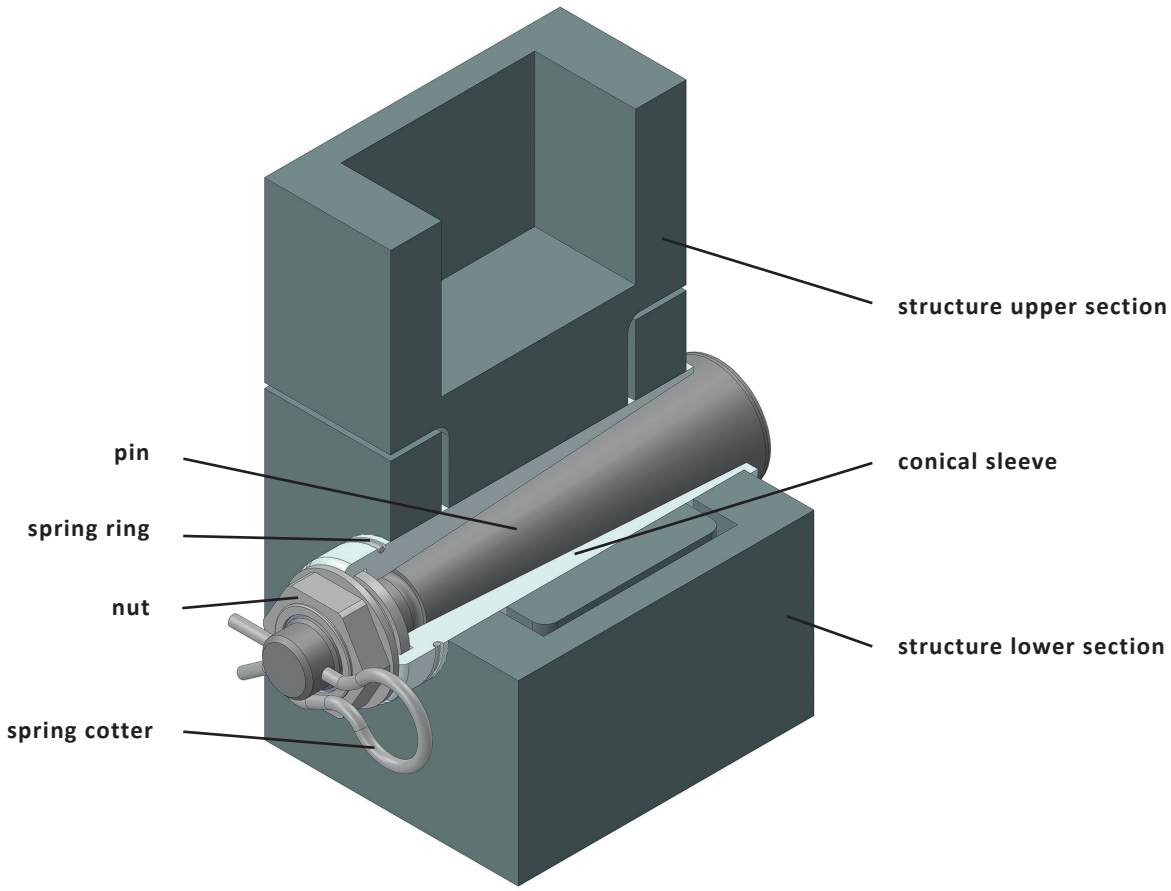

1/ assembly

1.1/ Offload the equipment, and prepare for installation by centering and cleaning the pin bore.

Do not force the pin into a bore that is not properly aligned, this may damage both pin and structure.

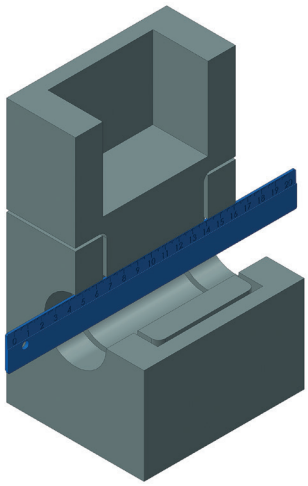

Important!
bondura® technology guaranties correct installing torque assuming the product is treated according to this assembly & inspection manual, and the torques are according to “technical specifications/torque”.
The torques given in section 2 are based on use of bondura® Assembly Paste on the threads.

1.2/ Remove spring cotter.

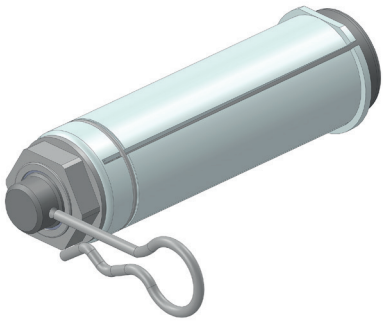

1.3/ Insert the assembly.

If you are struggling to insert the assembly, loosen the nut further to make sure the conical sleeve is completely contracted before the assembly is inserted.

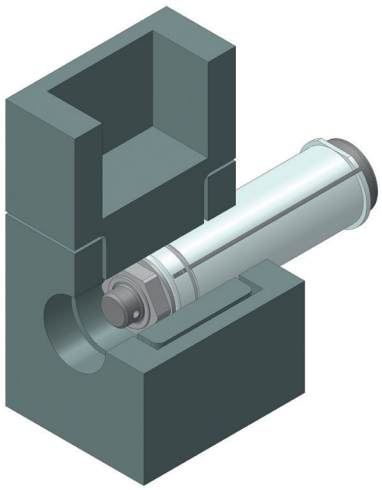

1.4/ Tighten the nut to the specified torque.
See “technical specifications/torque”.

If a large temperature difference is expected (ΔT>50deg.C) on the bondura® assembly between the time of torqueing and end of operation, it is recommended to contact bondura® technology to get an assessment whether it is necessary to correct the torque.

If necessary, use the anti-rotation tool as shown to prevent rotation of the pin during torqueing.

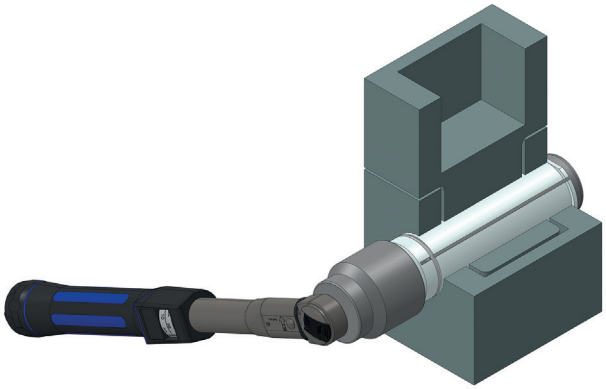

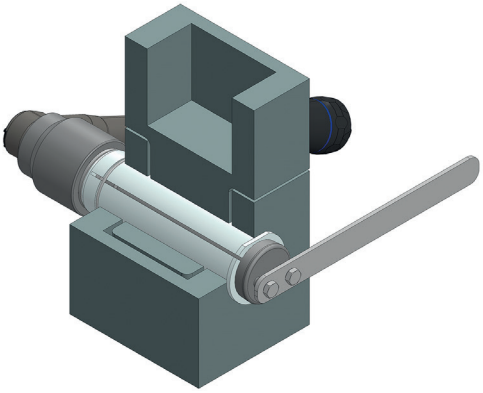

1.5/ The bondura® assembly locks to the structure as the conical sleeve expand and create a wedge-force between pin and supports, and thus prevent rotation and sliding sideways.

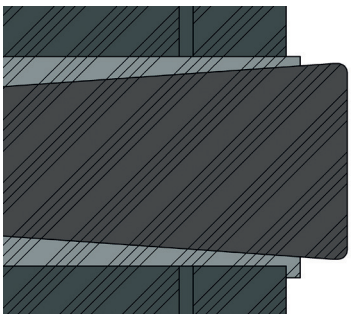

2/ technical specifications/torque

PIN size [mm]	Nut	
	Wrench size [mm]	Torque [Nm]
45	36 / (M22)	400
80	55 / (M42)	1200
100	75 / (M56)	1500

The specified torques are based on bondura® Assembly Paste to be used.
Use of other types of lubrication, or no use of lubrucation at all, will be the Customers own responsability.

3/ inspection

bondura® technology recommends the customer/user to implement a maintenance program to check the bondura® assembly along with the specified service intervals for the relevant equipment. It is important to control and ensure the expanding forces between conical sleeve and support, and retighten the nut if needed.

3.1/ Inspect if the assembly is loose, broken or misaligned.
a) Re-align the assembly
b) Check that the torque is as specified in the “technical specifications/torque”.
c) Replace broken or missing components.

4/ disassembly

Offload the equipment.
Remove the spring cotter and loosen the nut until the conical sleeve contract and loses pressure. Push the assembly out of the bore.

bondura®
technology

bondura® technology AS
Vardheivegen 56b
4340 Bryne
Norway

support tel +47 51 77 20 20
post@bondura.no
bondura.no