PIZZAFORM
table 1

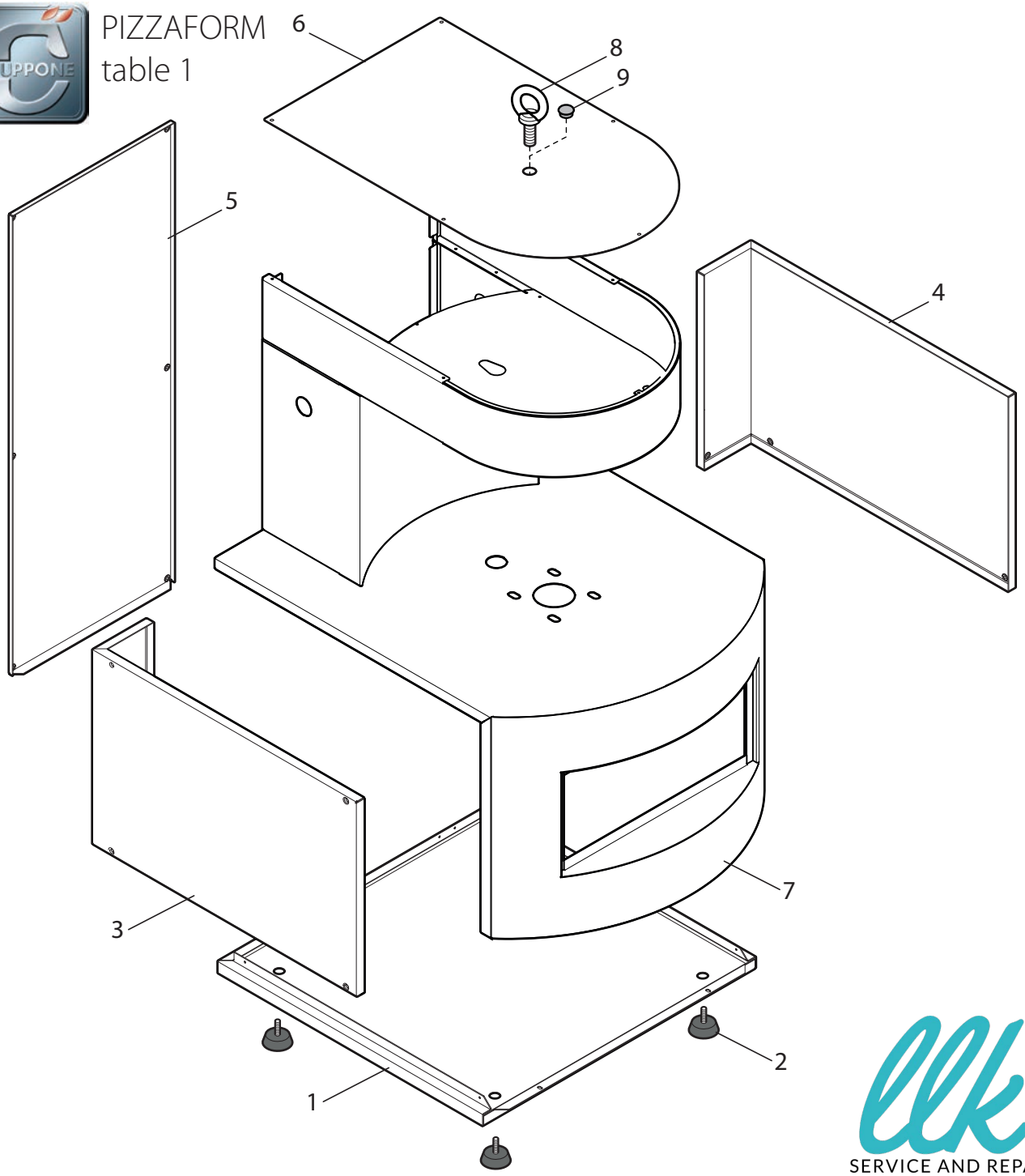

SERVICE AND REPAIRS

TABLE 1						
POS.	MODEL	VERSION	CODE	DESCRIPTION		
1	PZF 30-35		C01.2101	STAINLESS STEEL BASE		
	PZF 40-45-50		C01.2102	STAINLESS STEEL BASE		
2			C01.2103	ADJUSTABLE FOOT		
3	PZF 30-35		C01.2104	LH SIDE PANEL		
	PZF 40-45-50		C01.2105	LH SIDE PANEL		
4	PZF 30-35		C01.2106	RH SIDE PANEL		
	PZF 40-45-50		C01.2107	RH SIDE PANEL		
5	PZF 30-35		C01.2108	BACK PANEL		
	PZF 40-45-50		C01.2109	BACK PANEL		
6	PZF 30-35		C01.2110	COVER		
	PZF 40-45-50		C01.2111	COVER		
7	PZF 30-35		C01.2112	CASING		
	PZF 40-45-50		C01.2113	CASING		
8			C01.2114	MALE EYEBOLT 12		
9			C01.2115	NYLON CAP D.19		

PIZZAFORM
table 2

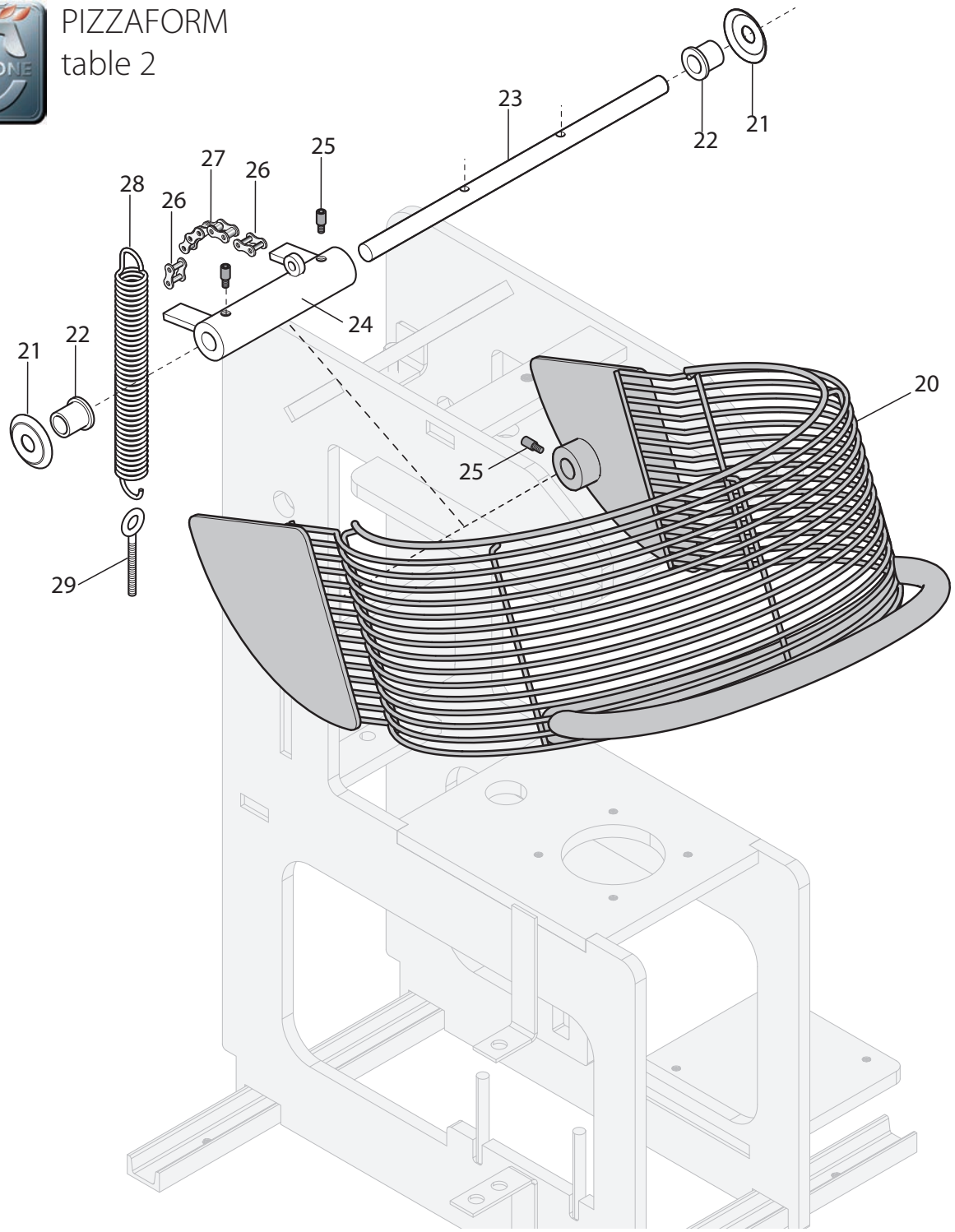

TABLE 2						
POS.	MODEL	VERSION	CODE	DESCRIPTION		
20	PZF 30-35		C01.2116	PROTECTION		
	PZF 40		C01.2117	PROTECTION		
	PZF 45-50		C01.2118	PROTECTION		
21			C01.2119	WASHER		
22			C01.2120	BUSH		
23	PZF 30-35		C01.2121	PROTECTION PIN		
	PZF 40-45-50		C01.2122	PROTECTION PIN		
24			C01.2123	SPRING GROUP		
25			C01.2124	DOWEL		
26			C01.2125	JOINT 1/2 SIMPLE		
27			C01.2126	CHAIN 1/2 SIMPLE		
28			C01.2127	SPRING		
29			C01.2128	EYELET		

PIZZAFORM
table 3
flared upper plate

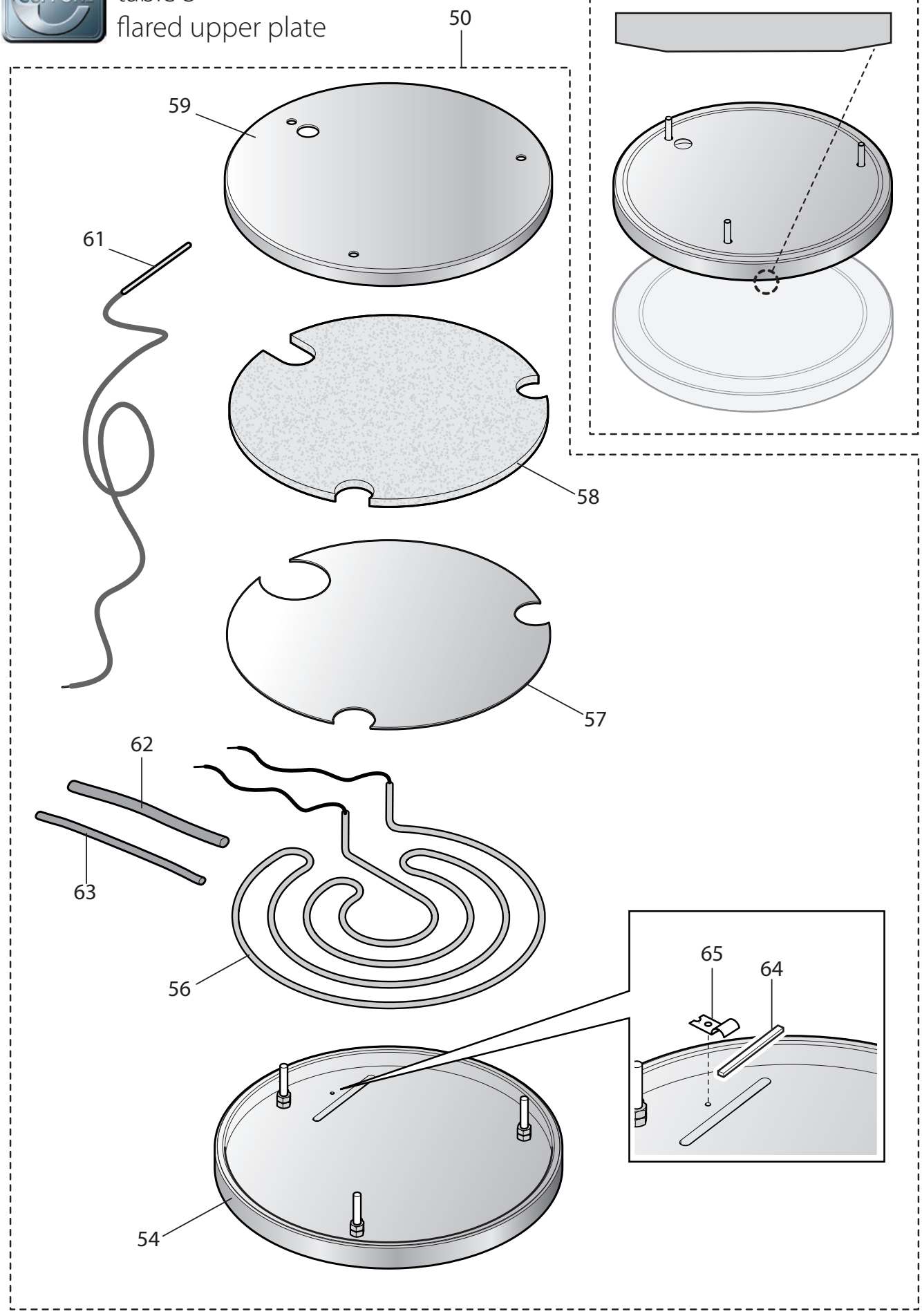

PIZZAFORM
table 4
flat upper plate

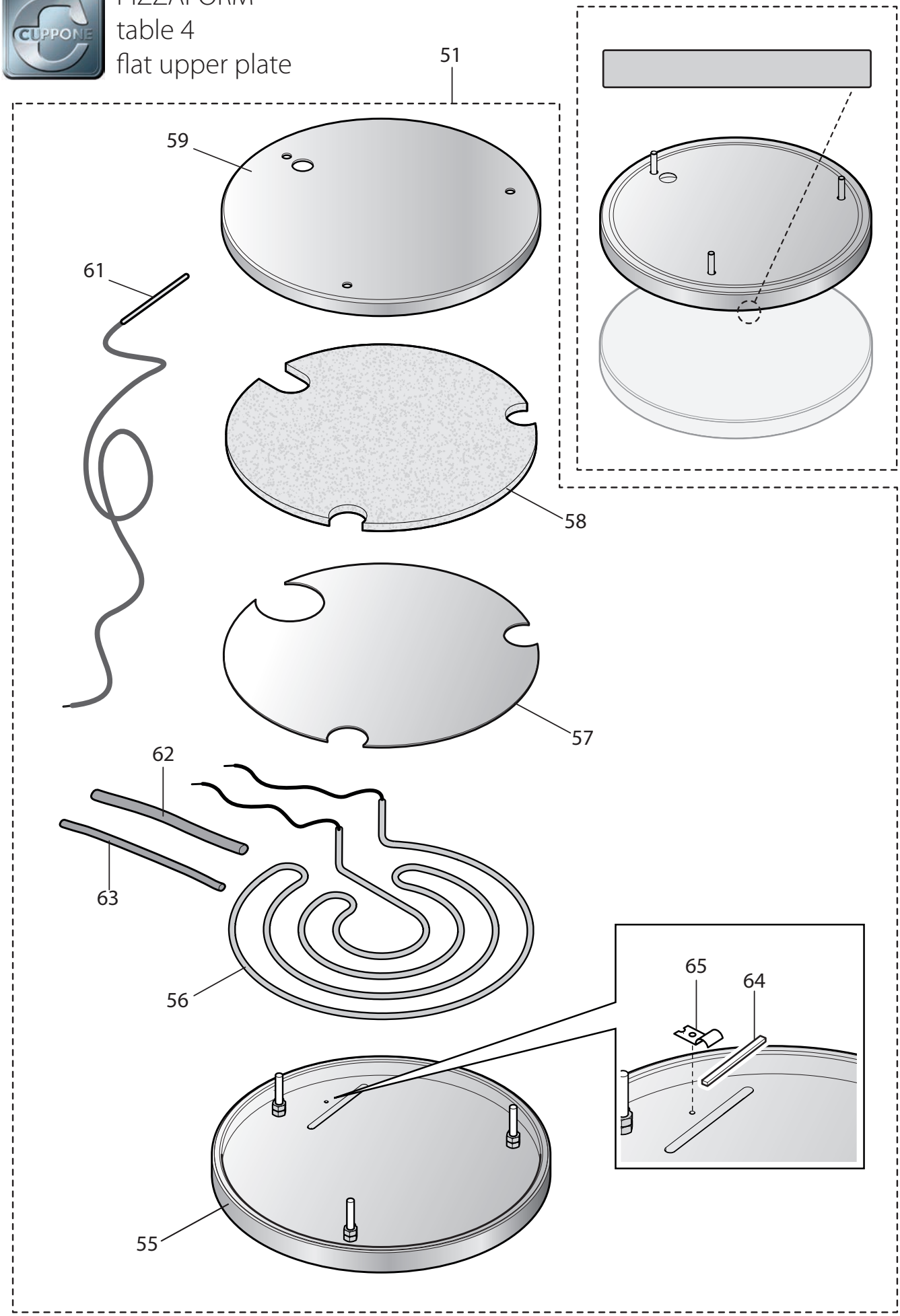

PIZZAFORM
table 5
flared lower plate

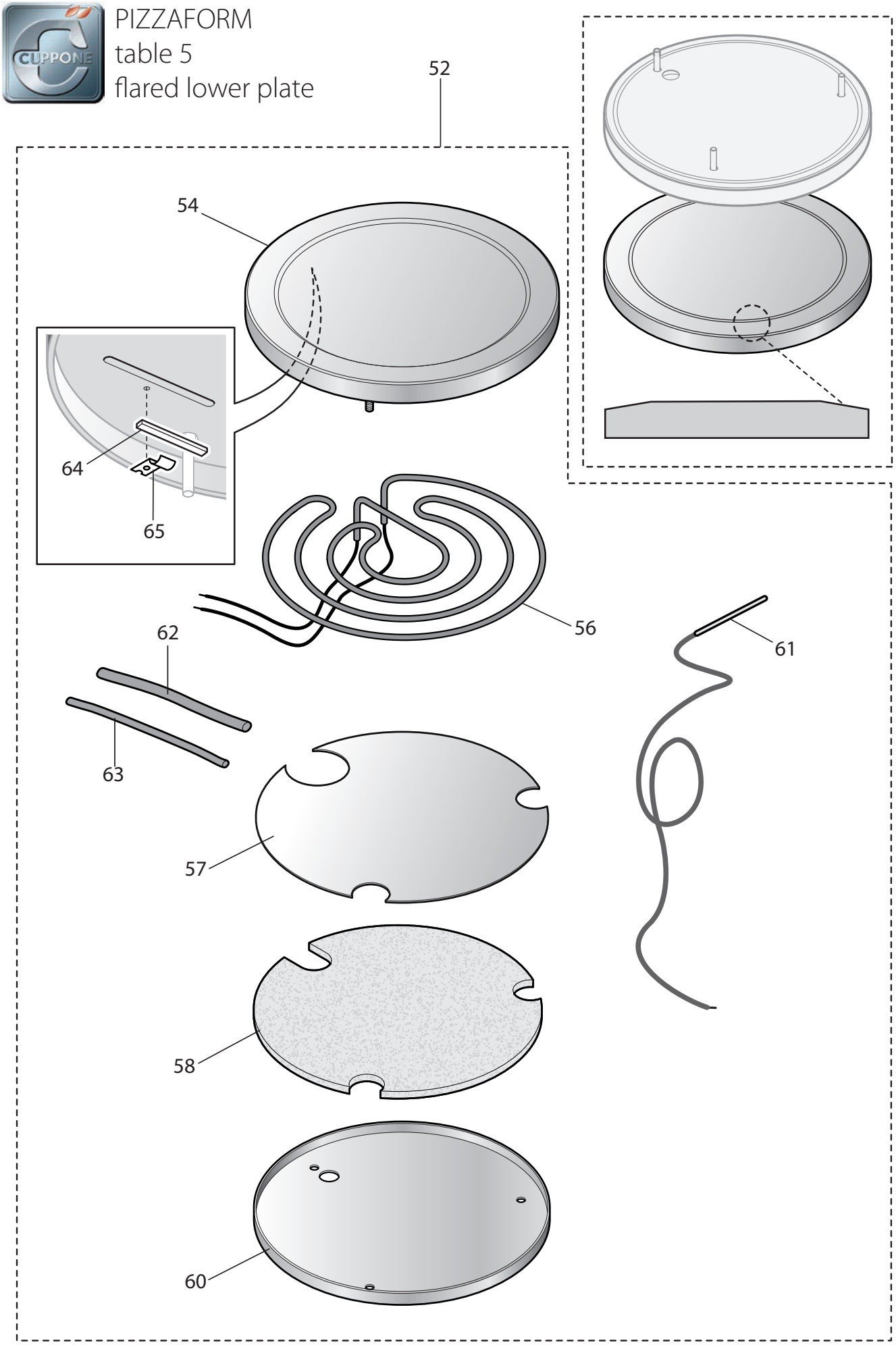

PIZZAFORM
table 6
flat lower plate

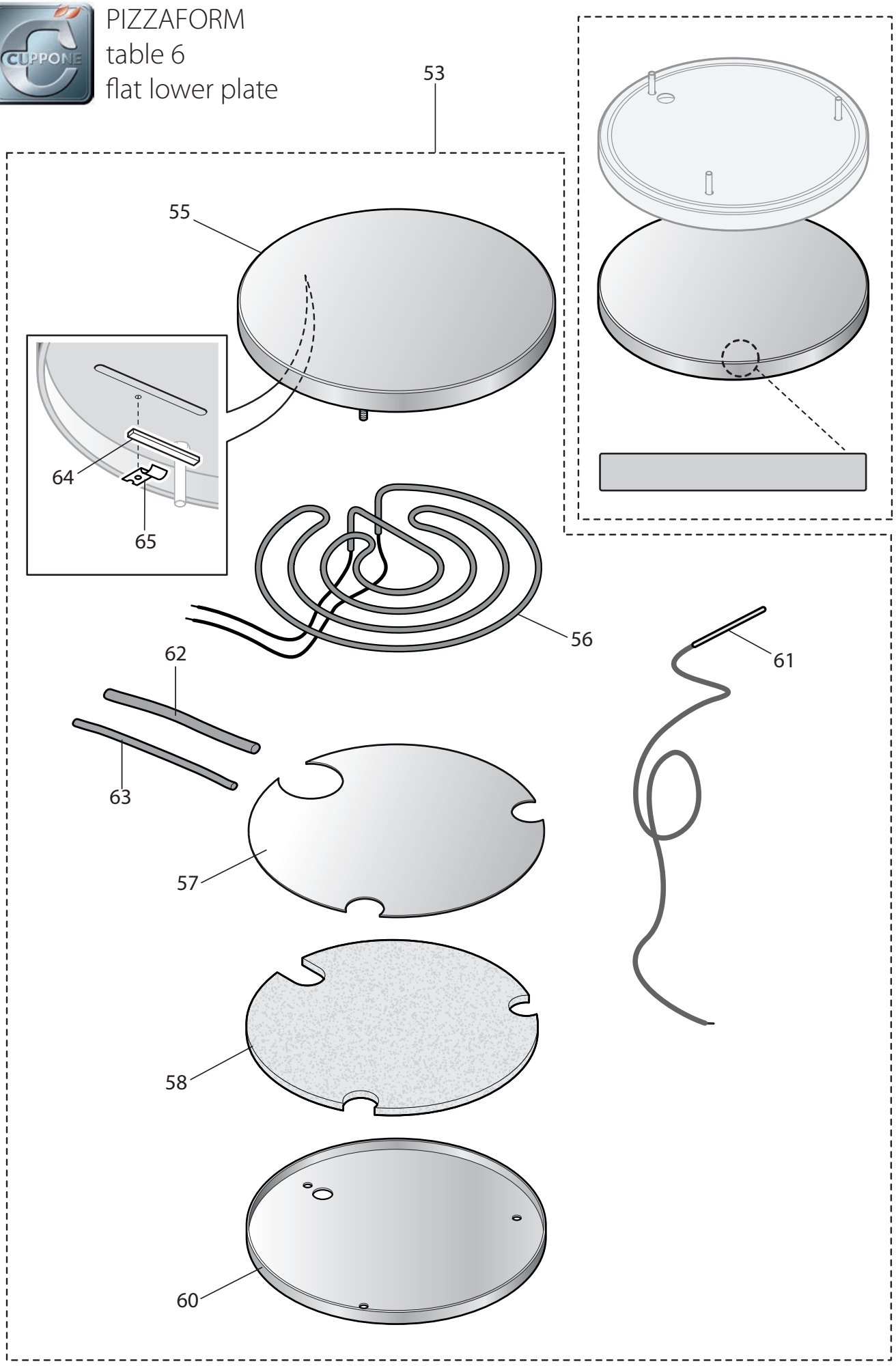

TABLE 3/4/5/6						
POS.	MODEL	VERSION	CODE	DESCRIPTION		
50	PZF 30		C01.2129	COMPLETE FLARED UPPER PLATE		
	PZF 35		C01.2130	COMPLETE FLARED PLATE		
	PZF 40		C01.2131	COMPLETE FLARED PLATE		
	PZF 45		C01.2132	COMPLETE FLARED UPPER PLATE		
	PZF 50		C01.2133	COMPLETE FLARED PLATE		
51	PZF 30		C01.2134	COMPLETE FLAT UPPER PLATE		
	PZF 35		C01.2135	COMPLETE FLAT PLATE		
	PZF 40		C01.2136	COMPLETE FLAT PLATE		
	PZF 45		C01.2137	COMPLETE FLAT UPPER PLATE		
	PZF 50		C01.2138	COMPLETE FLAT PLATE		
52	PZF 30		C01.2139	COMPLETE FLARED LOWER PLATE		
	PZF 35		C01.2130	COMPLETE FLARED PLATE		
	PZF 40		C01.2131	COMPLETE FLARED PLATE		
	PZF 45		C01.2140	COMPLETE FLARED LOWER PLATE		
	PZF 50		C01.2133	COMPLETE FLARED PLATE		
53	PZF 30		C01.2141	COMPLETE FLAT LOWER PLATE		
	PZF 35		C01.2135	COMPLETE FLAT PLATE		
	PZF 40		C01.2136	COMPLETE FLAT PLATE		
	PZF 45		C01.2142	COMPLETE FLAT LOWER PLATE		
	PZF 50		C01.2138	COMPLETE FLAT PLATE		
54	PZF 30		C01.2143	FLARED PLATE WITH PINS		
	PZF 35		C01.2144	FLARED PLATE WITH PINS		
	PZF 40		C01.2145	FLARED PLATE WITH PINS		
	PZF 45		C01.2146	FLARED PLATE WITH PINS		
	PZF 50		C01.2147	FLARED PLATE WITH PINS		
55	PZF 30		C01.2148	FLAT PLATE WITH PINS		
	PZF 35		C01.2149	FLAT PLATE WITH PINS		
	PZF 40		C01.2150	FLAT PLATE WITH PINS		
	PZF 45		C01.2151	FLAT PLATE WITH PINS		
	PZF 50		C01.2152	FLAT PLATE WITH PINS		
56	PZF 30		C01.2153	HEATING ELEMENT 230V 1790W		
	PZF 35		C01.2154	HEATING ELEMENT 230V 1790W		
	PZF 40		C01.2155	HEATING ELEMENT 230V 2400W		
	PZF 45		C01.2156	HEATING ELEMENT 230V 2900W		
	PZF 50		C01.2157	HEATING ELEMENT 230V 2900W		
57	PZF 30		C01.2158	HEATING ELEMENT COVER		
	PZF 35		C01.2159	HEATING ELEMENT COVER		
	PZF 40		C01.2160	HEATING ELEMENT COVER		
	PZF 45		C01.2161	HEATING ELEMENT COVER		
	PZF 50		C01.2162	HEATING ELEMENT COVER		
58	PZF 30		C01.2163	CERAMIC FIBRE DISC		
	PZF 35		C01.2164	CERAMIC FIBRE DISC		
	PZF 40		C01.2165	CERAMIC FIBRE DISC		
	PZF 45		C01.2166	CERAMIC FIBRE DISC		
	PZF 50		C01.2167	CERAMIC FIBRE DISC		
59	PZF 30		C01.2168	UPPER PLATE COVER		
	PZF 35		C01.2169	DISHCOVER		
	PZF 40		C01.2170	DISHCOVER		
	PZF 45		C01.2171	UPPER PLATE COVER		
	PZF 50		C01.2172	DISHCOVER		
60	PZF 30		C01.2173	LOWER PLATE COVER		
	PZF 35		C01.2169	DISHCOVER		
	PZF 40		C01.2170	DISHCOVER		
	PZF 45		C01.2174	LOWER PLATE COVER		
	PZF 50		C01.2172	DISHCOVER		
61			C01.2175	TCJ TEMPERATURE SENSOR		
62			C01.2176	GLASS SILICONE SLEEVE D. 12		
63			C01.2177	GLASS SILICONE SLEEVE D. 6		
64			C01.2178	PROBE SEAL		
65			C01.2179	BULB SUPPORT		

PIZZAFORM
table 7

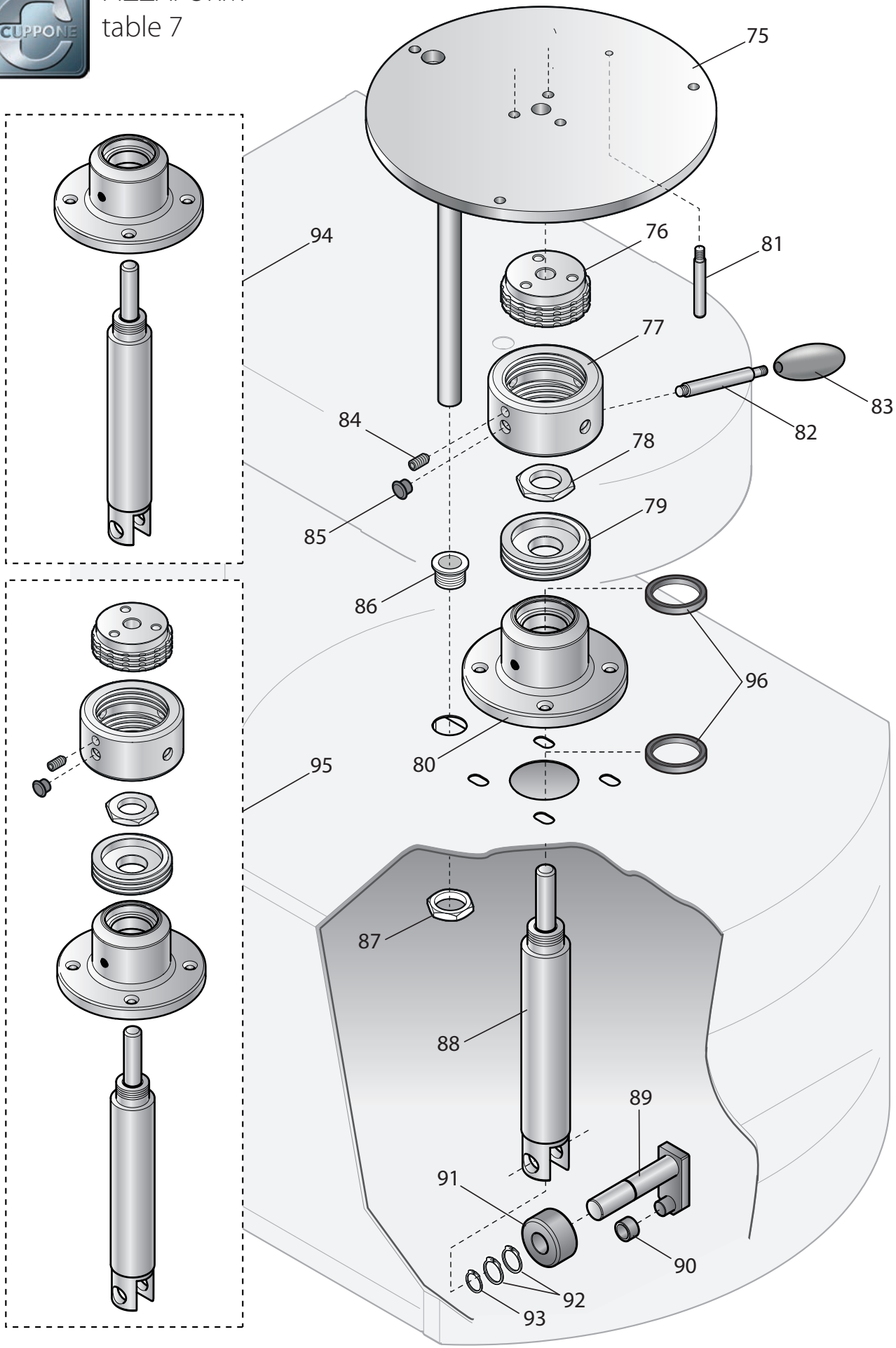

TABLE 7						
POS.	MODEL	VERSION	CODE	DESCRIPTION		
75			C01.2180	COMPLETE FLANGE		
76			C01.2181	ADJUSTMENT GROUP LH THREAD		
77			C01.2182	ADJUSTMENT GROUP RING		
78			C01.2183	HEXAGONAL FERRULE		
79			C01.2184	ADJUSTMENT GROUP RH THREAD		
80			C01.2185	COMPLETE TURRET		
81			C01.2186	ADJUSTMENT LEVER INTERLOCK		
82	PZF 30-35		C01.2187	ADJUSTING HANDLE		
	PZF 40-45-50		C01.2188	ADJUSTING HANDLE		
83			C01.2189	HANDLE		
84			C01.2190	PRESSER		
85			C01.2191	HOLE COVERING CAP		
86			C01.2192	PVC BUSH		
87			C01.2193	RING		
88	PZF 30-35		C01.2194	STEM COMPLETE WITH PLUG		
	PZF 40-45-50		C01.2195	STEM COMPLETE WITH PLUG		
89			C01.2196	PASTRY REMOVER		
90			C01.2197	BEARING		
91			C01.2198	BEARING		
92			C01.2199	RING FOR SHAFT 19		
93			C01.2200	RING FOR SHAFT 17		
94	PZF 30-35		C01.2201	TURRET GROUP		
	PZF 40-45-50		C01.2202	TURRET GROUP		
95	PZF 30-35		C01.2203	TURRET/ADJUSTMENT GROUP		
	PZF 40-45-50		C01.2204	TURRET/ADJUSTMENT GROUP		
96			C01.2205	OIL SEAL		

PIZZAFORM
table 8

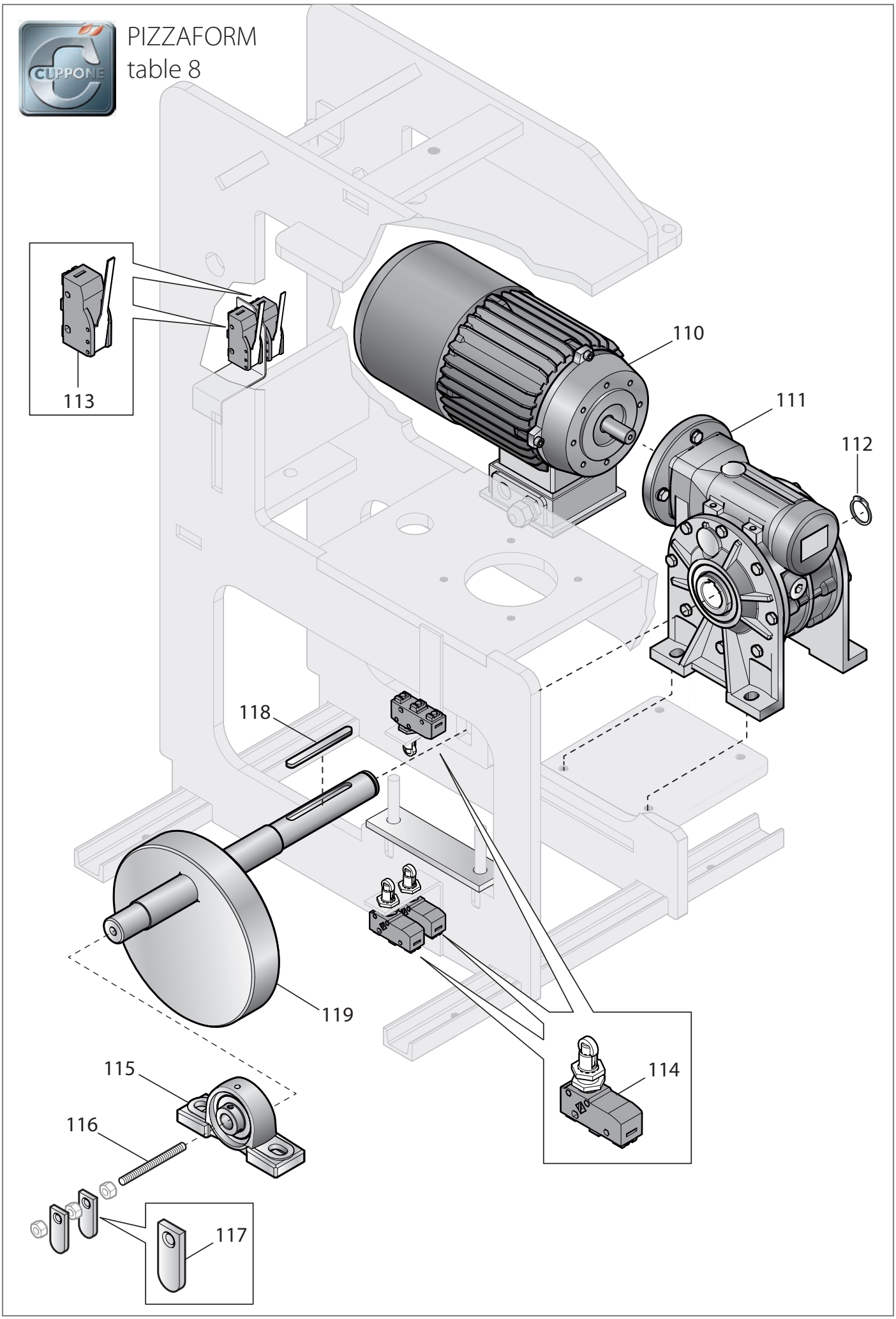

TABLE 8						
POS.	MODEL	VERSION	CODE	DESCRIPTION		
110	PZF 30-35	AC 230V	C01.2206	SINGLE-PHASE MOTOR 230-50Hz 0.37KW		
	PZF 40-45-50	AC 230V	C01.2207	SINGLE-PHASE MOTOR 230-50Hz 0.75KW		
	PZF 30-35	AC 3 230V AC 3 N 400V	C01.2208	THREE-PHASE MOTOR 400-50Hz 0.55KW		
	PZF 40-45-50	AC 3 230V AC 3 N 400V	C01.2209	THREE-PHASE MOTOR 400-50Hz 0.75KW		
111	PZF 30-35		C01.2210	REDUCER		
	PZF 40-45-50		C01.2211	REDUCER		
112			C01.2212	RING FOR SHAFT 25		
113			C01.2213	LEVER MICROSWITCH		
114			C01.2214	WHEEL MICROSWITCH		
115			C01.2215	SUPPORT		
116			C01.2216	ROD		
117	PZF 30-35	AC 230V AC 3 230V AC 3 N 400V	C01.2217	MICROSWITCH CAMS		
	PZF 40-45-50	AC 3 230V AC 3 N 400V	C01.2218	MICROSWITCH CAMS		
	PZF 40-45-50	AC 230V	C01.2219	MICROSWITCH CAMS		
118			C01.2220	KEY 8X7X80		
119	PZF 30-35		C01.2221	ECCENTRIC		
	PZF 40-45-50		C01.2222	ECCENTRIC		

PIZZAFORM
table 9

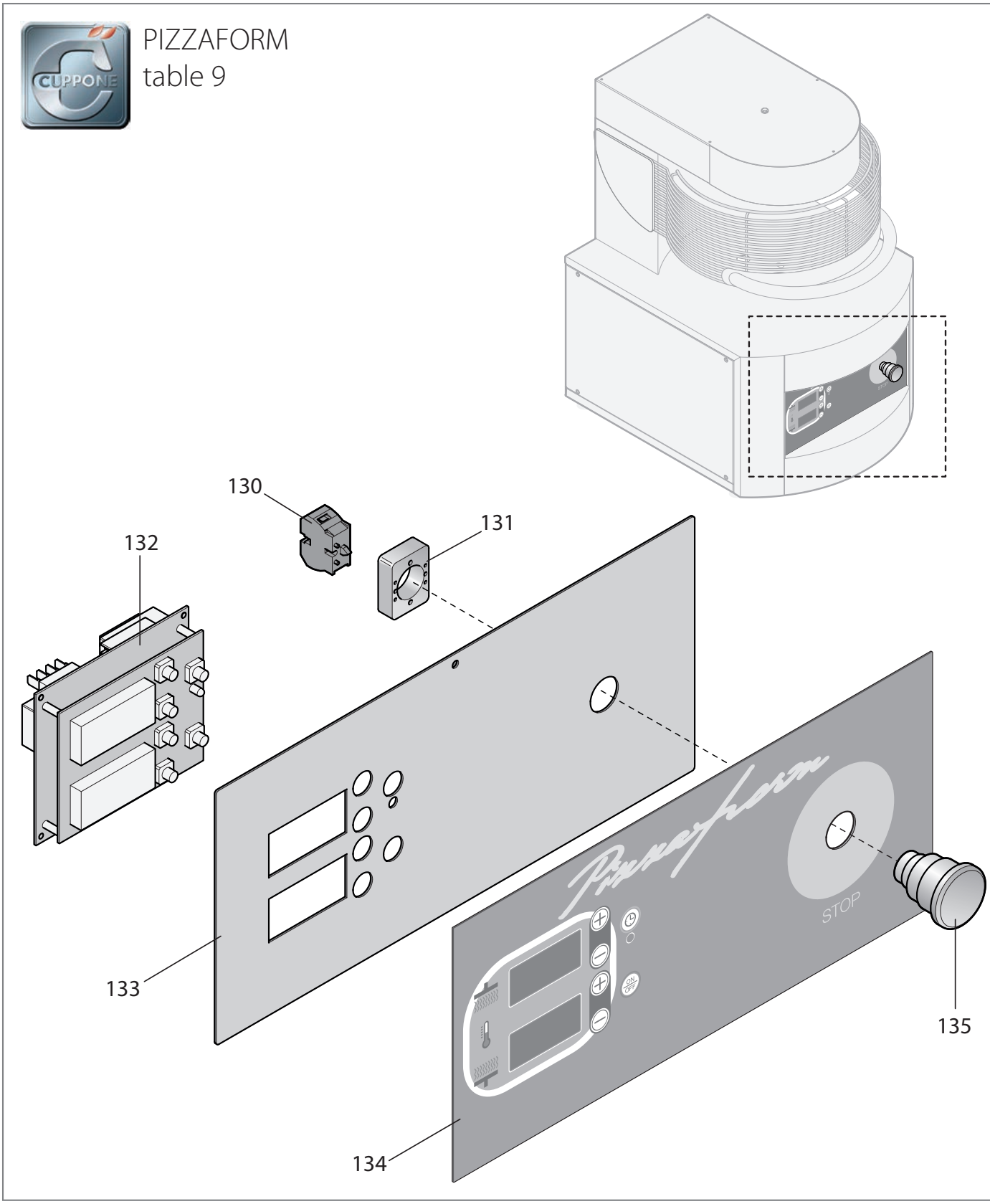

TABLE 9						
POS.	MODEL	VERSION	CODE	DESCRIPTION		
130			C01.2229	NC CONTACT		
131			C01.2230	BASE		
132			C01.2231	CONTROL PANEL		
133			C01.2232	INSTRUMENT PANEL		
134			C01.2233	FRONT		
135			C01.2234	MUSHROOM BUTTON		

PIZZAFORM
table 10

AC 230V
AC 3 230V
AC 3 N 400V

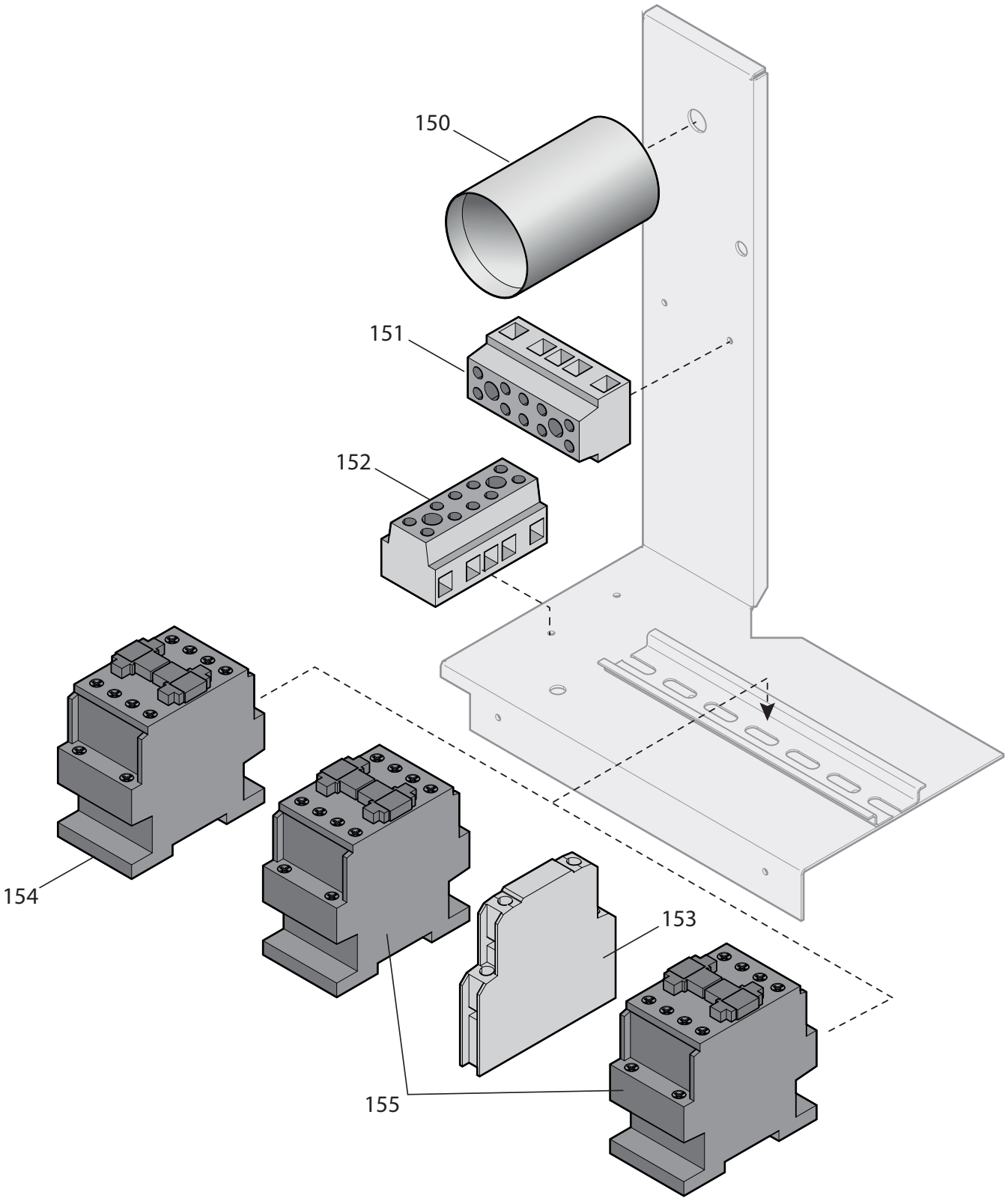

TABLE 10 AC 230V - AC 3 230V - AC 3 N 400V						
POS.	MODEL	VERSION	CODE	DESCRIPTION		
150			C01.2223	NOISE FILTER		
151			C01.2224	TERMINAL BLOCK G 10/5		
152		AC 3 230V AC 3 N 400V	C01.2224	TERMINAL BLOCK G 10/5		
		AC 230V	C01.2225	TERMINAL BLOCK G 10/3		
153			C01.2226	MECHANICAL INTERLOCK		
154	PZF 30 - 35	AC 230V	C01.1877	COUNTER MC - 9B		
	PZF 30 - 35	AC 3 230V				
	PZF 30 - 35 - 40 - 45 - 50	AC 3 N 400V				
	PZF 40 - 45 - 50	AC 230V	C01.2228	COUNTER MC - 32A		
	PZF 40 - 45 - 50	AC 3 230V				
155			C01.1877	COUNTER MC - 9B		