PIZZA AND CATERING EQUIPMENT PROFESSIONALS

Vegetable Preparation Machine

LLKVP/DISCS

Operating Manual

service@linda-lewis.co.uk www.linda-lewis.co.uk 0161 696 0052

Warnings and Precautions

The following warnings and precautions are important and must be observed:

- Ensure voltage and frequency power requirements for the vegetable preparation machine match that of the supply.
- The machine must be earthed when used. There is a danger of electric shock if it is not earthed.
- In case of emergency, please turn off the power switch and unplug the machine.
- If the electric wire becomes damaged, a qualified engineer or the manufacturer must replace it.

Linda Lewis Kitchens LTD is not responsible for any accidents or faults caused by amendments made to the machine or improper use by the user.

Technical Data

Specifications:

Model:	LLKVPM/DISCS
Voltage (V)	220-240V 50Hz
Power (W)	500
Disc Speed (rpm)	270
Weight (Kg)	23
Dimensions (mm)	235w x 490d x 480h

Installation

Positioning:
The installation of the unit must be performed by a qualified technician only.

Place the device on top of a solid, even, safe and stable surface that tolerates the weight of the unit.

Ensure no flammable products are placed near the unit, as it will get hot.

Position the device appropriately so that the plug is always accessible. Also ensure the unit isn't placed close to any water.

Before attempting to set the unit up, ensure it is switched off and unplugged.

The Cutting Blades and Graters:
Follow the instructions below and use figures 2-4 to ensure the blades and graters are correctly installed.

1. To open the unit, rotate the knurled locking handle and swing open the top cover. (See fig.2)

2. Fit the ejector disc, ensuring it engages on the drive shaft via the two pegs.

3. Locate the dicing grid if required. [**N.B** Dicing grids will only fit one way. (See fig.4)]

4. Locate the slots on the cutting disc in the pegs on the drive shaft and turn through 90 degrees to secure. (See fig.3). The cutting disc is correctly fitted when its centre boss is flush with the head of the drive shaft.

Warning: The cutting discs must be located /removed by handling the plastic disc and **NOT** by handling the cutting blade.

5. Return the cover to its operating position and relock into position using the knurled locking handle.

Figure 1

Figure 2

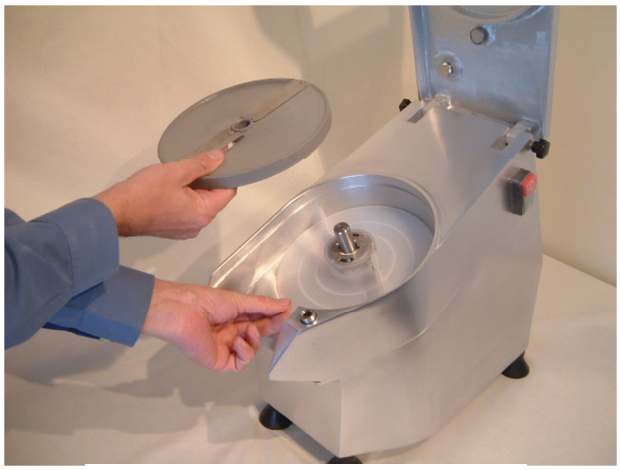

Figure 3

Figure 4

Operating Instructions

1. Select the correct feed hopper (large half-moon or small circular) and insert the chosen vegetable
2. Then use the feed arm or feed stick to apply gentle, constant pressure on the required food.
3. As the VPM works rapidly, once a vegetable has been placed in the hopper, it is imperative to maintain constant pressure to achieve uniform cuts/slices. This is particularly important when using the chipper.
4. With smaller vegetables a more uniform slice is achieved utilizing the smaller hopper.

Warning: Under **NO** circumstances attempt to push vegetables into the machine by hand.

Maintenance

Cleaning

The unit should be cleaned after each use. Before cleaning, ensure the machine is disconnected from the mains.

All removable parts: Ejector Disc, Cutting Blades, Dicing Grids and Feed Stick are dishwasher safe, or may be washed in warm soapy water. Prior to placing them back into the unit ensure they have been rinsed and dried thoroughly.

The body of the machine, including the inside of the top cover, should be wiped over with a damp cloth. Again before operating the unit again, ensure it has been dried thoroughly.

Do **NOT** use abrasives or other products, which are likely to cause damage to the machine body.

WARNING: Never immerse the body of the machine in water or spray directly with a jet of water.

Troubleshooting

In the event the LLKVPM/DISCS does not operate, check and try the following:

- Ensure the plug fuse is of the correct rating and type and that it has not blown.
- Check to make sure that both the top cover and the feed arm are correctly positioned and locked.
- Reset the machine by quickly switching OFF and then ON again.

Note: If none of the above resolves the issue, please contact the manufacturer.

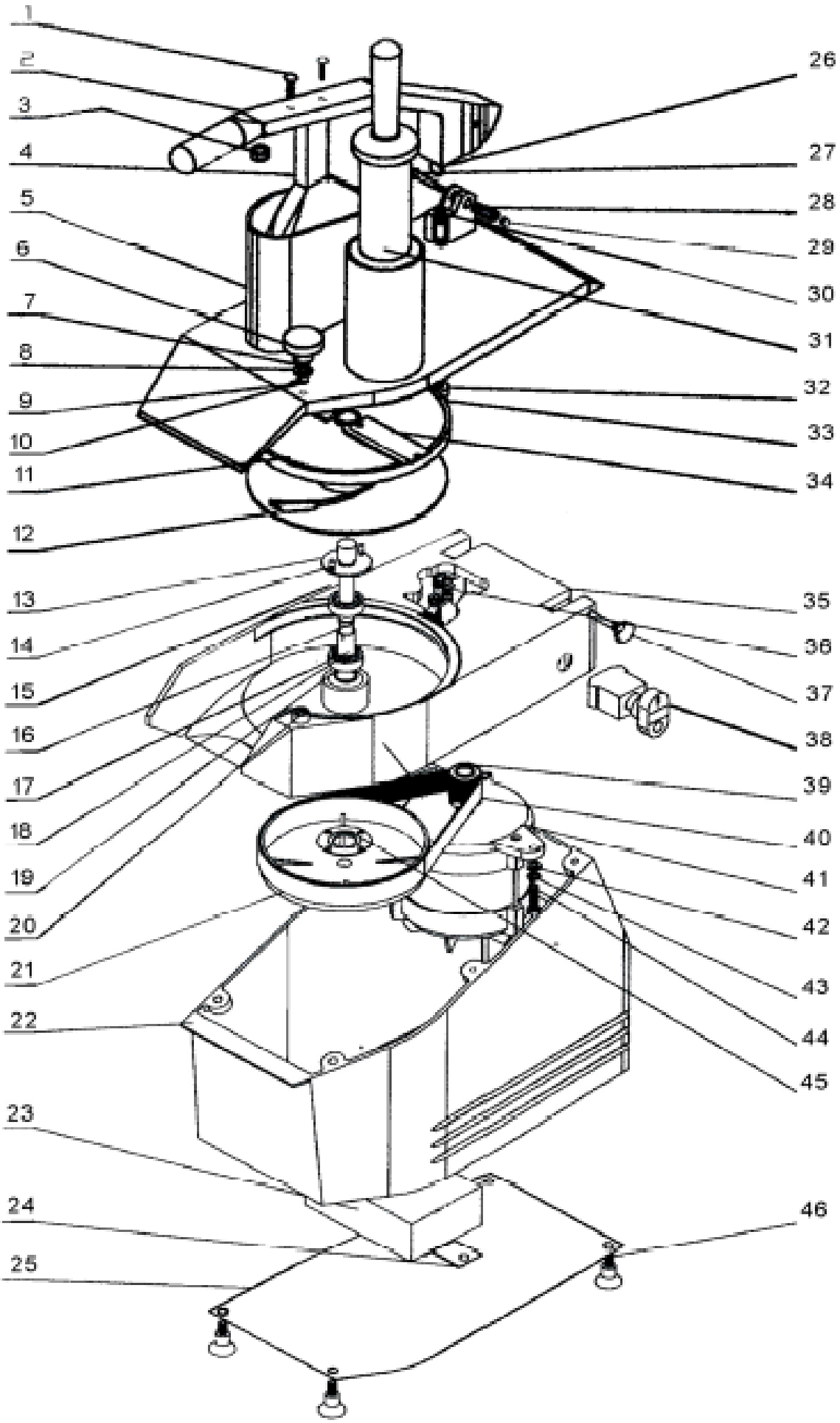
1
2
3
4
5
6
7
8
9
10
11
12
13
14
15
16
17
18
19
20
21
22
23
24
25
26
27
28
29
30
31
32
33
34
35
36
37
38
39
40
41
42
43
44
45
46

1	BOLT	P01.301	**24**	BOTTOM BOARD OF ELECTRIC BOX	P01.324
2	HANDLEBAR	P01.302	**25**	BOTTOM BOARD OF BODY	P01.325
3	NYLON GASKET	P01.303	**26**	MAGNET STEEL	P01.326
4	PRESSING PIECE	P01.304	**27**	UMBRELLA BOLT	P01.327
5	INPUT BODY	P01.305	**28**	STELL SHEATH	P01.328
6	ANCHOR KNOB	P01.306	**29**	NUT	P01.329
7	SPRING	P01.307	**30**	ADJUSTING BOLT	P01.330
8	GASKET	P01.308	**31**	PLASTIC PRESSING STICK	P01.331
9	PIN	P01.309	**32**	SEAT OF MAGNET	P01.332
10	ANCHOR SPINDLE	P01.310	**33**	MAGNET STEEL	P01.333
11	KNIFE DISC	P01.311	**34**	KNIFE	P01.334
12	DRAIN DISC	P01.312	**35**	BODY	P01.335
13	ANCHOR BOARD	P01.313	**36**	MICROSWITCH	P01.336
14	PIN	P01.314	**37**	WAVED BOLT	P01.337
15	OIL ENVELOPE	P01.315	**38**	SWITCH	P01.338
16	CENTRAL SPINDLE	P01.316	**39**	STRAPPED WHEEL	P01.339
17	ISOLATED SHEATH	P01.317	**40**	BELT	P01.340
18	GEAR	P01.318	**41**	MOTOR	P01.341
19	BLOCK CIRCLE	P01.319	**42**	GASKET	P01.342
20	ANCHOR SHEATH	P01.320	**43**	GASKET	P01.343
21	BELT WHEEL	P01.321	**44**	BOLT	P01.344
22	SEAT OF BODY	P01.322	**45**	GEAR COVER	P01.345
23	ELECTRIC BOX	P01.323	**46**	BOLT	P01.346