Ref. PF8

ROW

1

USERS

+12 years

13,7 m²

TÜV Rheinland

Measurements expressed in millimeters

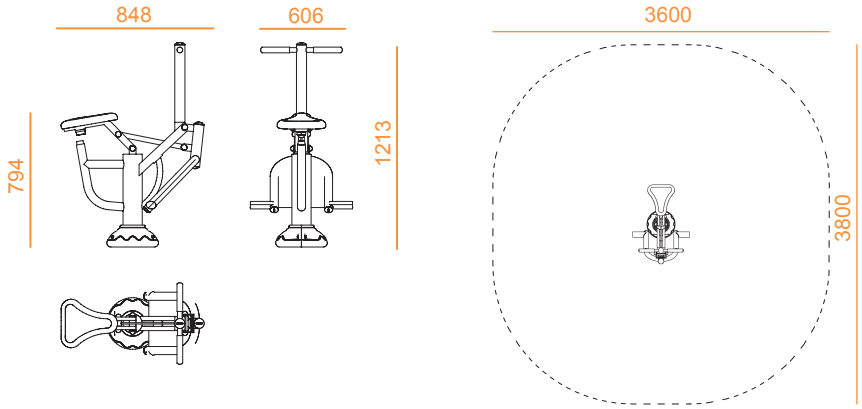

FEATURES

BENEFITS:	Development of the muscles in the arms and legs, waist, abdomen and back. Improves coordination among the four limbs. Strengthening of the heart and lung functions.
MANUFACTURING:	Tube structure made of galvanized steel with reinforced tread system and polypropylene handles.
FINISHING:	Baked polyester paint, black and grey RAL9006 colour.
INSTALLATION:	Available for installation on hard ground and soft ground.
TECHNIQUE:	Sitting on the chair, holding the handles with both hands, and your feet on the footrests. Stretch your legs, while bending your arms and achieve a position with a straight back.

+44 (0)1278 741 110
info@mortisportandplay.co.uk

Morti Sport & Play reserves the right to make changes to its products without notice.